# Guide to Carrying Out Restricted Activities within Railway Protection and Safety Zones

**May 2009 Edition**

Land Transport Authority

All rights reserved. No part of this publication may be reproduced, stored in a retrieval system, or transmitted, in any form or by any means, electronic, mechanical, photocopying, recording or otherwise, without the prior permission of the Development and Building Control Division, Land Transport Authority

CONTENTS


| | | Page |
|---|---|---|
| | Preface | 1 |
| 1 | Chapter 1<br>GENERAL | |
| 1.1 | Introduction | 2 |
| 1.2 | Types of Restricted Activities | 2 |
| 1.3 | Consultation | 3 |
| 1.4 | Definitions | 3 |
| 1.5 | Reference plans | 4 |
| 1.6 | Definitions of reserve lines of the rapid transit systems | 5 |
| 2 | Chapter 2<br>SAFETY CONSIDERATIONS | |
| 2.1 | Planning | 6 |
| 2.2 | Movement or operation of any crane, whether fixed or mobile, hoist, ladder, gondola systems, drilling or piling equipment, excavator or any other mechanical equipment or vehicle | 7 |
| 2.3 | Installation of boreholes, wells, sheet piles, pile foundations, ground anchors and horizontal tie-backs | 16 |
| 2.4 | Storage and placing of combustible and non-combustible materials, flammable fluid and diesel/petrol powered equipment | 25 |
| 2.5 | Digging or excavation of trenches or pits and carrying out of earthworks and backfilling | 29 |
| 2.6 | Dredging of sea bed or river bed and anchoring of vessel with displacement weight of more than 20m | 31 |
| 2.7 | Erection of sheds, shelters, tents, scaffolding, maintenance towers, ladders, hoardings or other similar temporary structures for purpose of trade fairs, fun fairs, exhibitions, entertainment, night markets, religious functions or ceremonies | 33 |
| 2.8 | Planting of tree with full grown height exceeding above the parapet or wing wall of the railway | 36 |
| 2.9 | Use of explosive material for purpose of blasting, demolition or removal of rocks | 38 |
| 2.10 | Construction of tunnel and related underground facility | 40 |
| 3 | Chapter 3<br>APPLICATION FOR PERMIT TO CARRY OUT RESTRICTED ACTIVITIES | |
| 3.1 | General | 43 |
| 3.2 | Application for permission to carry out trench excavation for services laying | 43 |
| 3.3 | Application for permission to erect tents | 43 |
| 3.4 | Application for permission to carry out other restricted activities | 43 |
| 3.5 | Endorsement by qualified person | 46 |

3.6 Exemption 46

4 Chapter 4
RISK ASSESSMENT
4.1 General 47
4.2 Identification of hazards 47
4.3 Risk Evaluation 48
4.4 Risk Control 48

5 APPENDICES 50
Standard application forms 51
Risk Register 62

# PREFACE

The Rapid Transit Systems (Railway Protection, Restricted Activities) Regulations were enacted to regulate activities which when carried out in the vicinity of the railway would expose the railway to danger.

Under the above Regulations, any person intending to carry out restricted activities within the railway protection zone shall obtain prior permission from the Authority before commencement of work on site. The Authority may impose terms and conditions as it thinks fit in granting its permission.

This Guide to Carrying Out Restricted Activities within Railway Protection and Safety zones provides guidance to Qualified Person, contractor or any person who intends to carry out restricted activities.

As part of the Authority‘s continual efforts to more business friendly, the Authority embarked on the review of this Guide in Jan 2006 and has completed this new edition. We welcome any suggestion or feedback from all users on the latest version of Guide for improvement of future editions.

Chapter 1

# GENERAL

## 1.1 Introduction

Restricted activities could cause injuries and fatalities to passengers or results in damage to the railway thus disrupting passenger train service if there are no proper design, carefully thought through method of working or construction and safety and precautionary measures. It is important that restricted activities are carefully planned and application for permission to carry out the restricted activities is submitted to LTA. The restricted activities should only be carried out after permission is obtained from LTA.

This guide offers guidance to any person proposing to carry out restricted activities within the railway protection and safety zones. It describes safety considerations to be adopted for carrying out restricted activities that should be taken into account when planning the restricted activities. It also outlines the submission requirements for obtaining the Authority's permission to carry out the restricted activities. Examples of some approved restricted activities which were carried out in close proximity to the rapid transit systems are also given to illustrate good practices.

A risk register prepared by the Authority is included in the guide for reference. This is supplemented with definition of terms used in the register and a risk matrix table. This register covers risks and hazards of the restricted activities, development, building and engineering work in railway protection and safety zone. It would be helpful to any person who intends to carry out restricted activities within the railway protection and safety zones to prepare a risk assessment report for submission to the Authority.

## 1.2 Types of Restricted Activities

1.2.1 Restricted activities are defined in the Schedule of the Regulations. They are as follows:

(a) The movement or operation of any crane, whether fixed or mobile, hoist, ladder, drilling or piling equipment, excavator or any other mechanical equipment or vehicle;

(b) The installation of boreholes, wells, sheetpiles, pile foundations, ground anchors and horizontal tie-backs;

(c) The storing or placing, or causing or allowing the storage or placement of, any goods, material or thing or any solid, liquid or gaseous matter or substance;

(d) The digging or excavation of trenches or pits, the carrying out of earthworks and backfilling, or the shifting or pushing of earth or soil from one area to

another, whether or not such activities are carried out manually or by mechanical means;

(e) The dredging of sea beds or river beds and the anchoring of vessels with displacement (laden) weight of more than 20 tonnes;

(f) The erection of sheds, shelters, tents, scaffolding, maintenance towers, ladders, hoardings and other similar temporary structures for the purpose of trade fairs, fun fairs, exhibitions, entertainment, night markets, religious functions or ceremonies;

(g) The planting of trees with full-grown height extending above the parapet or wing wall of the railway;

(h) The use of explosive material for the purpose of blasting, demolition or removal of rocks; and

(i) The construction of an underground passageway designed for use as a street or railway; to serve as a conduit for utilities; to provide access for people, vehicles or equipment to an underground working site.

## 1.3 Consultation

1.3.1 Any person may consult the Authority on the requirements pertaining to restricted activities within the railway protection zone before making any formal application for approval. You may call Development & Building Control Division office to arrange for a consultation.

1.3.2 Any preliminary consultation with the Authority shall not be taken as approval or disapproval of the proposal or to be construed as having the agreement of the Authority.

1.3.3 All correspondence including applications for approval and requests for consultation meeting or information should be addressed to:

Deputy Director
Development & Building Control Division
Land Transport Authority
251 North Bridge Road
Singapore 179102

## 1.4 Definitions

For the purpose of this guide, the following definitions shall apply:

"above ground structure" shall include viaduct, bridge, abutment and any rapid transit systems station which adjoins the railway viaduct;

"at grade structure" shall include any rapid transit systems station where the platform level is at ground level, on embankment or in cutting and any section of the railway with tracks at ground level, on embankment or in cutting;

"Authority" means the Land Transport Authority of Singapore established under the Land Transport Authority of Singapore Act 1995;

"professional engineer" means a person registered under the Professional Engineers Act;

"qualified person" means a person as defined in the Building Control Act (Cap 29);

"railway" means a network or system of fixed horizontal rails, tracks, grooves or other guide-ways on, under or above the ground along which a train moves or runs, and includes all tunnels, viaducts, bridges, crossings, stabling yards, depots, stations and other infrastructures constructed or intended to be constructed for any railway and any extensions thereof;

"railway protection zone" means that part of the land or area which is within 40 metres from the outermost edge of any part of the railway that is on, above or below the ground;

"railway safety zone" means the land delineated as such in plans and maps prepared by the Authority pursuant to regulation 4;

"rapid transit systems" mean any one of the railways or any part thereof set up or intended to be set up under this Act to meet the transport requirements of the public and includes the mass rapid transit systems set up under the repealed Act;

"restricted activity" means any activity specified in the Schedule of the Rapid Transit Systems (Railway Protection, Restricted Activities) Regulations;

"sub-aqueous structure" shall include any rapid transit systems structure beneath river or sea;

"the Regulations" means the Rapid Transit Systems (Railway Protection, Restricted Activities) Regulations as amended from time to time;

"transition structure" shall include any rapid transit systems structure that occurs between underground structure and above ground or at grade structure; and

"underground structure" shall include inter-alia any rapid transit systems underground station, bored tunnel, cut and cover tunnel, interchange shaft, pedestrian passage, cross passageway between tunnels and emergency escape shafts.

## 1.5 Reference Plans

1.5.1 Plans defining the railway protection and safety zones prepared by the Authority are available for inspection during the usual working hours at the office of the Development & Building Control Division of Land Transport Authority at 251 North Bridge Road Singapore 179102.

1.5.2 The plans provided are based on data available at the time of enquiry and are given without prejudice to any changes which may take place subsequently. Whilst every endeavour is made to ensure that the information provided is updated and correct, the Authority disclaims any liability for any damage or loss that may be caused to any person directly or indirectly as a result of any error or omission.

1.6 Definitions of reserve lines of the rapid transit systems

1.6.1 Drawings indicating the definitions of reserve lines for the various rapid transit systems structures are attached for reference.

| | |
|---|---|
| LTA/DBC/CPRP/001 | Definition of reserve lines and zone of influence for bored tunnels |
| LTA/DBC/CPRP/002 | Definition of reserve lines and zone of influence for underground and transit structures |
| LTA/DBC/CPRP/003 | Definition of reserve lines and zone of influence for at grade structures |
| LTA/DBC/CPRP/004 | Definition of reserve lines for above ground structures |

Chapter 2

# SAFETY CONSIDERATIONS

## 2.1 Planning

**F**igure 1
Site planning for movement and operation of construction equipment

It is important to bear in mind all safety considerations when planning to carry out any restricted activities in railway protection and safety zones to safeguard operation of railway and not damage the rapid transit system structures. During the planning process, risk assessment or hazard analysis identifying all possible risks the restricted activities may pose to the rapid transit systems must be carried out. This should be followed with working out safety and precautionary measures to mitigate these risks. This should include study the use of suitable equipment/construction plant, appropriate and effective control measures that could be implemented suitably trained and qualified workers, operators, supervisors and management staff, etc.

2.2 Movement or operation of any crane, whether fixed or mobile, hoist, ladder, gondola systems, drilling or piling equipment, excavator or any other mechanical equipment or vehicle

USE OF MOBILE CRANE, DRILLING OR PILING EQUIPMENT, ELEPHANT PUMP, LORRY CRANE, CHERRY PICKER IN VICINITY OF ELEVATED AND AT GRADE RAILWAY

Possible risks

The risks posed by the movement and operation of crane, drilling or piling equipment on the elevated and at grade railway could include:-

- These equipments may topple and hit the railway structures and trains.
- Boom of equipment could slew and hit the railway structures and trains.
- Load lifted by crane may swing into the direction of passing trains.
- Materials being lifted could drop and strike the railway structures and train

Precautionary measures and safety control

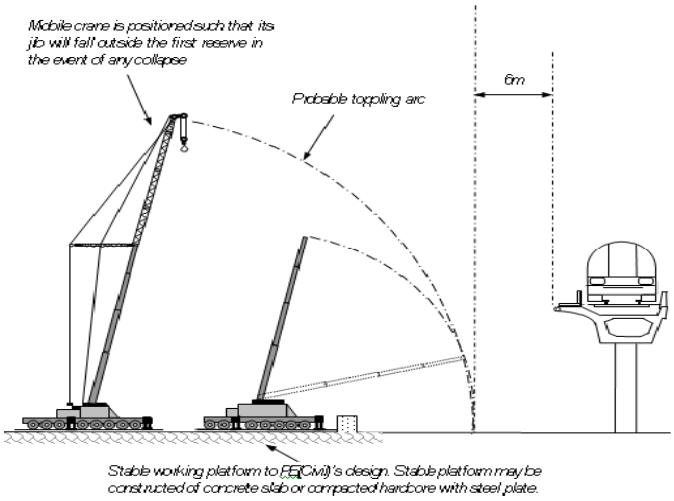


Figure 2-1
Mobile or crawler crane must not collapse into 1st reserve should it topples

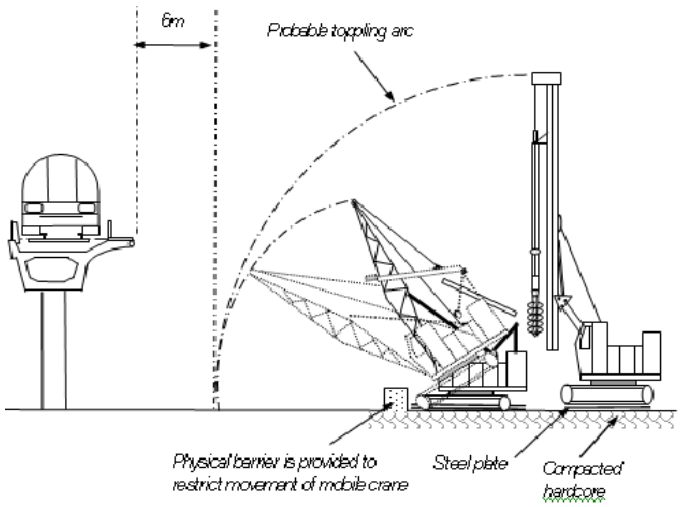


**F**igure 2-2
Operation of crane, drilling or piling equipment must not collapse into the 1st reserve

- The appropriate machine should be selected for the work.
- Lifting equipment must have valid LM certificates.
- Position the crane such that the boom and equipment when topple will not fall into 1st reserve when they are moving and in operation. (See **F**igure 2.1, 2.2)
- Lifting of materials/equipment must not be carried out in 1st reserve
- Access and working platform of crane and equipment must be designed, checked and endorsed by P**E**. This should include wind load.
- Outriggers or tracks of crane must be fully extended and supported on steel plates over firm ground.
- Crane and piling equipment must be operated by competent and qualified operator and supervised by lifting supervisor or safety officer
- Crane and piling equipment shall park a safe distance away from the railway at end of each day after use.
- Provide physical barrier warning restricted zone when the equipment and plant should not encroach. (See **F**igure 2.2)
- Install 1st reserve markers along boundary of site next to the MRT structures. (See **F**igure 2.3)
- Provide tag line and other measures to prevent load from swing to the railway.

## SPECIAL CONDITIONS FOR CRANE OR PILING EQUIPMENT OPERATIONS IN 1ST RESERVE

If it is necessary for lifting operating operation, piling etc to be carried inside the 1st reserve, additional safety measures must be implemented and observed. These include:

- PE (Mech) shall inspect and certify crane and lifting accessories are in good working conditions at least once in every three months.

- PE (Civil) shall provide standing supervision during the lifting operation. The PE shall submit application Form LTA DBC RAIL-SUPV-1 for undertaking to supervise crane operation within railway protection and safety zones. He may appoint assignee to act on his behalf subject to verification and acceptance of LTA.

- Copies of checklist from PE (Mech) and records on supervision from PE (Civil) must be made available for inspection on site.

- Height of piling equipment lower than RTS viaducts are allowed to operate under the viaducts and in 1st reserve. (See figure 3-5, 3-7, 3-10)

Figure 2-3
Standing supervision for crane operation close to 1st reserve

**F**igure 2-4
P**E** (Civil) provides standing supervision for operation of equipment in 1st reserve

- **E**xhaust and fumes from machineries operating near the station ventilation shafts and entrances could draw into the station. This could activate the smoke detectors and fire alarm system in the station. They should be orientated so that the fumes and exhaust are directed away form the station intake/supply shafts and entrances.

- Similarly dust from these activities near the station must also be controlled and minimised.

- Lifting operations within the 1st reserve must be carried out after train hours that is normally from 0100 to 0430 hours if the restricted activities will endanger safe train operation. (See **F**igure 2-5)

**F**igure 2-5
Crane operation for lifting protective roof over MRT tracks during non train operation hours

- Temporary protection shelter or cover must be erected over RTS viaduct if lifting load can fall on the railway track. This should be designed for the impact load expected. Mock-up to test the temporary structure would be necessary. (See **F**igure 2-6, 2-7)

- Larger and heavier items where the impact is high must only be lifted after train operation hours.

Protective screen

**F**igure 2-6
**E**rection of protective steel portal frames over MRT tracks with steel plates for lifting operations close to RTS tracks

Protective shelter

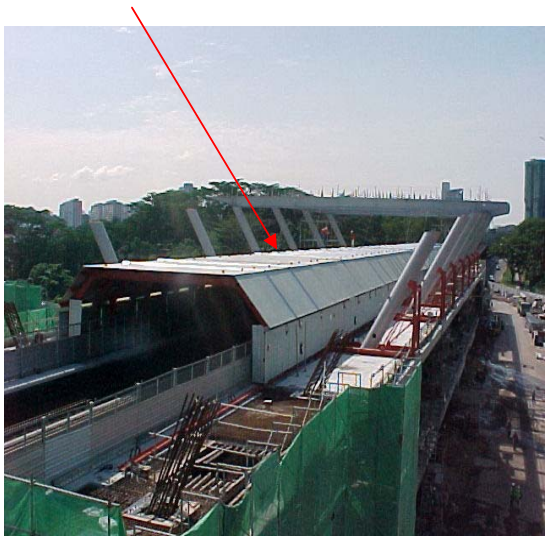

**F**igure 2-7
Protective shelter over MRT tracks

USE OF TOWER CRANE

Possible risks

The risks are similar to those of mobile crane.

- Part of tower crane or its load may fall on to elevated or at grade railway structure if it topples or if there is a mechanical fault.
- The mast of tower crane could collapse due to fatigue or structure failure.
- Foundation of tower crane not designed and installed properly.

Precautionary measures and safety control

- Tower crane could be preferably positions behind proposed building away from the railway. (See Figure 2-8)

Figure 2-8
Tower crane erected behind proposed building

- Foundation must be designed by a PE (Civil) and its construction supervised by the PE.
- Free standing tower crane must be positioned such that its jib will not topple into the 1st reserve. (See figure 2-9, 2-10)

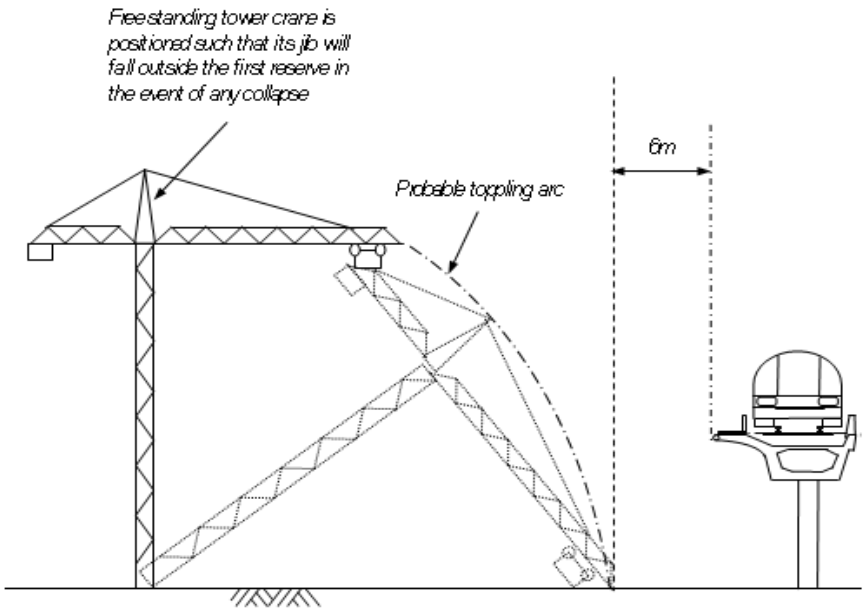


**F**igure 2-9
**F**ree standing tower crane must topple outside the 1st reserve

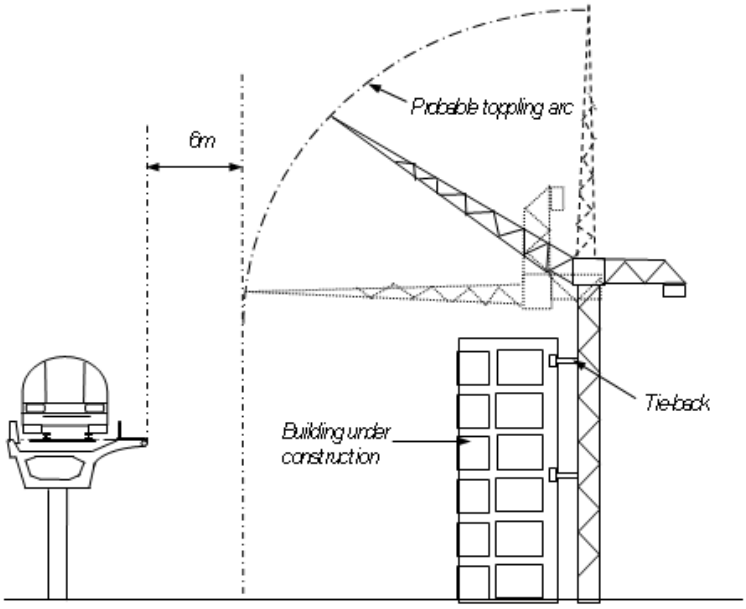


**F**igure 2-10
Tower crane when tied back to building must topple outside 1sr reserve

- Tower crane mast must be adequately tied back to building superstructure before erecting or jacking up to the next height

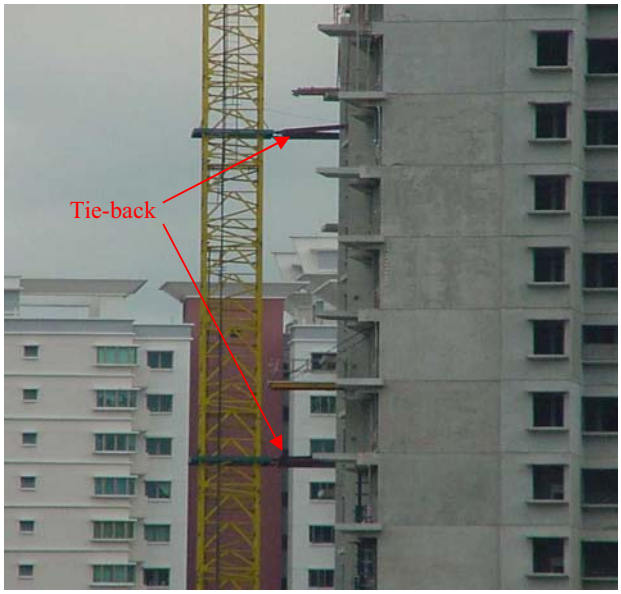


**F**igure 2-11
Tie-back installed to building before jacking up

- **E**rection and dismantling of tower crane using mobile crane must not endanger the railway. Submission of the proposal is required to show this.

- Tower crane must be tested and copy of LM certificate submitted to LTA before the crane is put into operation.

## 2.3 Installation of boreholes, wells, sheet piles, pile foundations, ground anchors and horizontal tie-backs

INSTALLATION OF BOREHOLE AND PILE

Possible risks

- Drilling or boring into ground may damage RTS underground structures such as station, tunnels, pilecaps and piles.
- Driving of pile could cause vibration thus damage RTS underground structure.
- Drilling or boring and driving of piles could also hit raker/inclined piles supporting the MRT viaducts. Raker piles are installed to support the MRT piers between Jurong East Station and Ulu Pandan Depot.

Precautionary measures and safety control

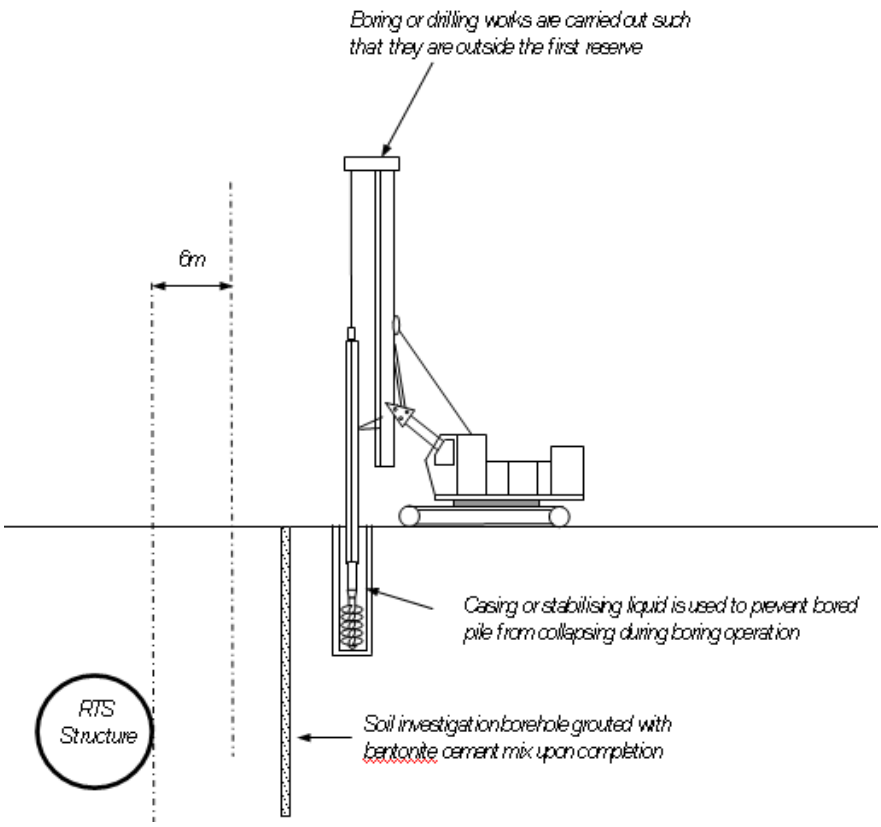


Figure 3-1
Borehole must be sufficiently clear from RTS underground structure

- The location of the RTS underground structure must be clearly identified before drilling starts for any boreholes in the 2nd reserve or 20m whichever is greater. An application for verification of drilling positions using LTA DBC Rail_Survey for drilling in the vicinity of ground RTS structures must be made. This includes hardcopy and softcopy of survey plan showing:

  a) Hardcopy of submission
     - Topography and ground features details
     - Cadastral Lot Information
     - Railway Information eg track centreline & level, track name, 1st & 2nd reserve lines where applicable
     - Cadastral coordinates of Ground Instrumentation positions/offset distance from closest viaduct columns
     - List of instrument to be checked
     - Certified by Registered Surveyor

  b) Softcopy of submission
     - Autocad or Microstation
     - Cadastral True X and **Y** positions
     - Scale 1:1

- Borehole and pile must be sufficiently clear from RTS underground structure (6m clear).

- The location of boreholes/piles less than 20m clear from the underground RTS structures must be set out by a registered surveyor.

- Submit location plan showing drilling positions in relation to RTS structures for drilling in the vicinity of elevated or at grade RTS structures.
  - Their location must be set back at least 6m from edge of MRT pilecaps or footings.
  - Where the MRT structure is also supported on raker piles (between Clementi and Jurong **E**ast MRT Stations) the boreholes must be set back 6m from the toe of the raker piles. (See **F**ire 3-2)

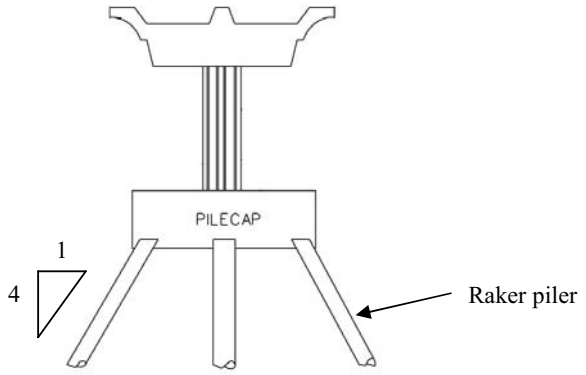


**F**igure 3-2
Raker piles of above MRT structure

- Alternatively the 1st reserve line and edge of the underground structure could be set out by a registered surveyor and the location of all boreholes and piles are verified against these lines at site. Positions of boreholes and piles where in 2nd reserve must be set up by registered surveyor.

- All boreholes of soil investigation works must be grouted up with cement-bentonite mixture.

- **V**ibration generated at MRT structures by equipment used for installation or driving of piles temporary casings must not exceed peak particle velocity of 15mm/s.

- **E**xhaust and fumes from machineries operating near the station ventilation shafts and entrances could draw into the station. This could activate the smoke detectors and fire alarm system in the station. They should be orientated so that the fumes and exhaust are directed away form the station intake/supply shafts and entrances.

- Similarly dust from these activities near the station must also be controlled and minimised.

USE OF EXCAVATOR OR DRILLING EQUIPMENT UNDER RTS VIADUCT AND ABOVE UNDERGROUND RTS STRUCTURES

Possible risks

- The movement and operation of excavator and drilling equipment under the viaduct may damage the lightning protection system or the drainage system of the viaduct

- Equipment/plant could also accidentally knock the viaduct structure.

- The roof of RTS underground stations and some stretches of the RTS tunnels are very shallow. The operation of excavator and drilling equipment above them could damage them.

Precautionary measures and safety control

- Movement and operation of excavator or other mechanical equipment must avoid the lightning protection system or the drainage system of the viaduct.

- Identify and clearly mark up earthing pit of lightning protection system of the viaduct to prevent damaging it.

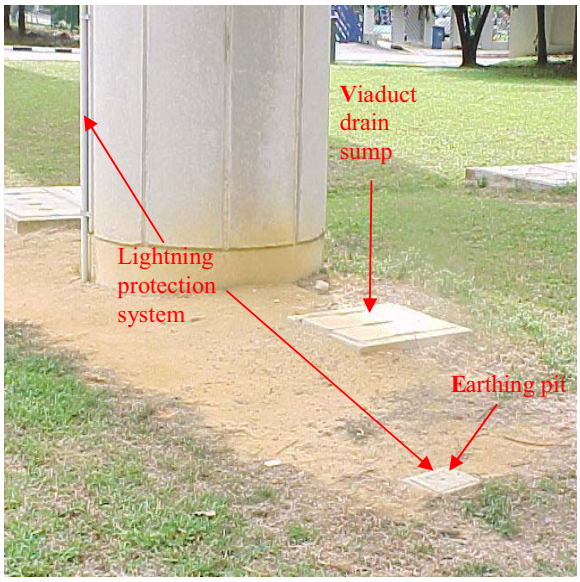


Figure 3-3
RTS viaduct lightning protection system

**F**igure 3-4
RTS viaduct drainage

**F**igure 3-5
Steel hoarding erected around RTS viaduct column for operation mechanical equipment beside column

- Machineries such as excavator, drilling equipment, etc must operate at least 1m clear from the underside of the viaduct beam and edge of viaduct column.

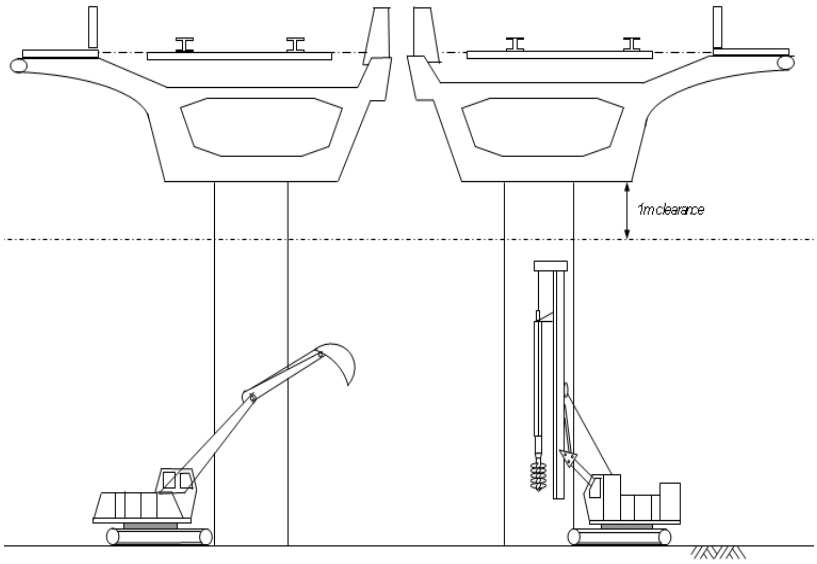


**F**igure 3-6
Operation of excavator or drilling equipment under RTS viaduct

- Use appropriate equipment/plant such as suitable low headroom equipment. (See **F**igure 3-7, 3-8, 3-9, 3-10, 3-11)

**F**igure 3-7
Diaphragm wall machine modified to operate under RTS viaducts

**F**igure 3-8
Low headroom diaphragm wall machine selected to operate beside RTS viaducts at Bouna **V**ista

**F**igure 3-9
Low headroom diaphragm wall machine at Harbourfront underpinning works

**F**igure 3-10
A frame piling below RTS station

- **E**dge of pilecaps, footings and foundation must be identified. **E**xcavation and soil drilling must keep clear from the viaduct pilecaps.

**F**igure 3-8
Micro-pile installation clear from pilecap of RTS viaduct

- Operation of excavator or drilling equipment must avoid roof of RTS underground stations and shallow RTS tunnels.

- Height restriction gantries must be provided on both sides of the RTS viaduct for movement of crane or other mechanical equipment under RTS viaduct beam. Minimum height clearance allowed to underside of RTS structures should be 1m.

**F**igure 3-12
Height restriction gantry both side of MRT viaducts

## 2.4 Storage and placing of combustible and non-combustible materials, flammable fluid and diesel/petrol powered equipment

STORAGE AND PLACING OF COMBUSTIBLE AND NON-COMBUSTIBLE MATERIALS, FLAMMABLE FLUID AND DIESEL/PETROL POWERED EQUIPMENT

Possible risks

- Materials and equipment stored or placed above the underground railway structure will impose a surcharge load on the RTS structures. The load of the materials or equipment may be higher than the design load for the RTS structures.

- The storage and placing of combustible materials flammable fluid and diesel/petrol powered equipment or vehicle pose a fire risk to the elevated and at grade RTS structures.

- LPG cylinder, oxy-acetylene cylinder and storage tank could explode if they catch fire. This would endanger general public using the rapid transit systems.

Precautionary measures and safety control

Figure 4-1
Storage of combustible materials outside 1st reserve

- Combustible materials, flammable fluid and diesel/petrol powered equipment should not be stored or placed in the 1st reserve (>6m).

- The magnitude of the imposed load from the materials or equipment on RTS structures should be checked to comply with the Code of Practice for Railway Protection.

- Check bearing capacity of the ground is able to support the materials or equipment.

- Additional diesel/petrol must not be stored or placed on the equipment for re-fuelling purposes.

- LEW should check that use of generator is electrically safe and within the safe load capacity and properly earthed. He must check and maintain the generator monthly.

- Exhaust of the equipment must be directed away from the RTS structures particularly station entrance, ventilation shafts.

- If crane or other lifting appliances are needed for unloading/loading materials or equipment, conditions for their use must meet section 2.2.

STORAGE TANK AND ASSOCIATED PIPING SYSTEM OF CLASS I FLAMMABLE AND CLASS II AND III COMBUSTIBLE LIQUID

Possible risks

- The storage of flammable and combustible liquid/substance poses a fire risk to rapid transit systems.

- The storage tank could explode if they catch fire. This would endanger general public using the rapid transit systems.

Precautionary measures and safety control

- Storage tank such as skip tanks must be of non pressurised type and placed at least 20m clear from elevated or at grade railway.

- High protective wall must be erected to isolate storage tank of flammable fluid in the vicinity of elevated and at grade rapid transit system structure

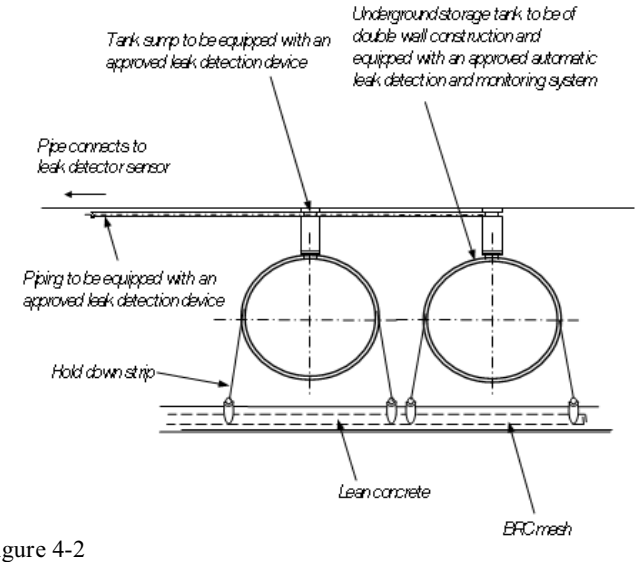


**F**igure 4-2
Underground storage tank and piping system for flammable fluid

- Underground storage shall be located outside the 1st reserve.
- Underground storage tank and piping must be of non pressurised type and located at least 6m from underground RTS structures.
- Underground storage tank shall be of double wall construction designed such that leakage is contained within the outer wall.

**F**igure 4-3
Underground fuel storage tanks outside 1st reserve. Tanks and associated piping equipped with automatic leak detection and monitoring system

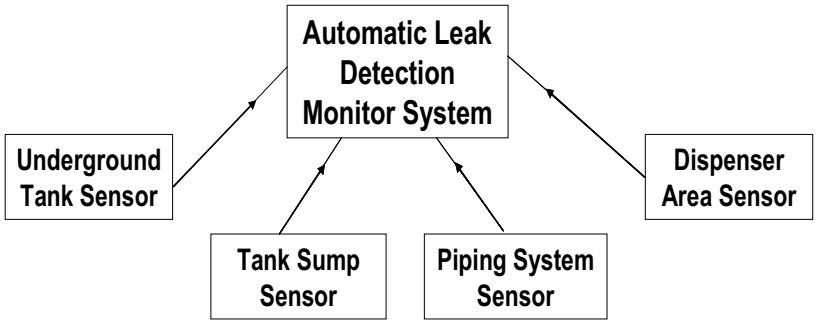


**F**igure 4-4
Automatic leak detection monitoring system with visual and audio alarm in petrol station

- The tank, tank sump, dispenser and piping system must be equipped with leak detection system and monitored

- **V**ault tank and piping must be provided with approved corrosion protection system.

- Surface around the dispensing area should be graded such that any spills will be directed away from rapid transit systems.

## 2.5 Digging or excavation of trenches or pits and carrying out of earthworks and backfilling

### EXCAVATION OF TRENCH, TRIAL PIT AND CARRYING OUT EARTHWORK

Possible risks

- Trench excavation is normally allowed above the rapid transit system tunnels and under the viaduct.

- The use of vibratory equipment should be controlled to ensure that the vibration on the rapid transit system structure will not exceed a peak particle velocity of 15mm/s to avoid damage of RTS structures.

- The movement and operation of excavator and drilling equipment under the viaduct may damage the lightning protection system or the drainage system of the viaduct or accident knock the viaduct structure.

- Trench excavation above shallow underground RTS station roof and tunnels which are generally about 1.5m deep is not allowed to prevent damage. The shallow tunnels areas include the following:
  - Sims Ave East/Changi Road (Junction of Chai Chee/ Siglap Road)
  - Padang Jeringau
  - Henderson Road
  - Woodlands Industrial Park D Street 1
  - Sengkang East Way

Precautionary measures and safety control

Figure 5-1
Trench excavation for laying of services

- The movement and operation of excavator under RTS viaduct must comply with section on the use of excavator or drilling equipment under RTS viaduct.

- **V**ibration generated by equipment used for trench excavation, trial pits and earthwork above, at grade and underground RTS structures must not exceed ppv of 15mm/s.

- Proper shoring and retaining system must be provided for trench depth more than 2m.

- Trench must be backfilled and compacted immediately after services or pipes are laid.

- **E**xhaust and fumes from machineries operating near the station ventilation shafts and entrances could draw into the station. This could activate the smoke detectors and fire alarm system in the station. They should be orientated so that the fumes and exhaust are directed away form the station intake/supply shafts and entrances.

- Similarly dust from these activities near the station must also be controlled and minimised.

- The trench excavation for services of depth less than 2m are not required to apply and obtain permission from LTA:
  - If it is located more than 6m from edge of MRT/LRT viaduct, elevated stations & fence of depot
  - If it is located more than 6m from fence of at grade railway structures

## 2.6 Dredging of sea bed or river bed and anchoring of vessel with displacement weight of more than 20m

DREDGING OF SEA BED OR RIVER BED AND ANCHORING OF VESSEL

Possible risks

- Dredging above RTS tunnels could damage their waterproofing systems and cause leaks in the tunnels.
- The RTS tunnels could also be damage and water could infiltrate and flood the rapid transit systems

Precautionary measures and safety control

- Dredging above the rapid transit system tunnels should not exceed the levels specified by LTA.
- Vessel of laden weight exceeding 20 tonnes should anchor and park outside the 1st reserve
- Equipment used under RTS viaduct spanning across waterway must be at least 1m clear from RTS structures.

Figure 6-1
Dredging of river beds

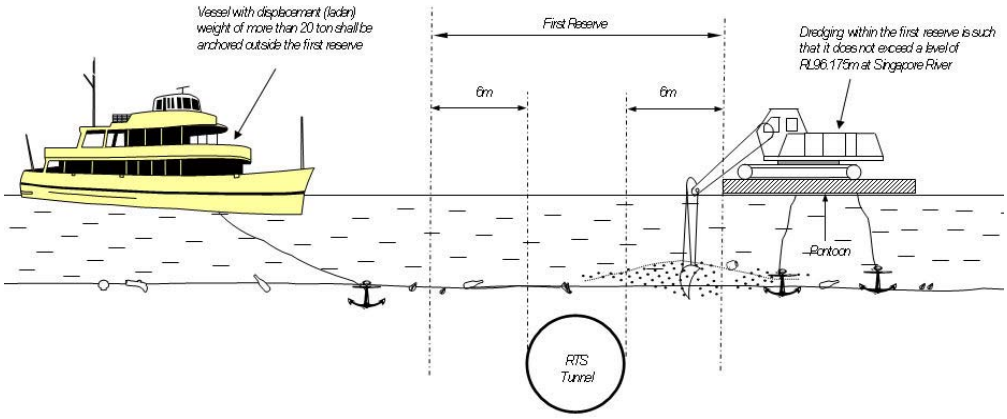


- **F**igure 6-2
  Dredging of riverbed or sea bed and anchoring of vessel

2.7 Erection of sheds, shelters, tents, scaffolding, maintenance towers, ladders, hoardings or other similar temporary structures for purpose of trade fairs, fun fairs, exhibitions, entertainment, night markets, religious functions or ceremonies

ERECTION OF TENTS, SCAFFOLDING OR OTHER TEMPORARY STRUCTURES

Possible risks

- Tent and temporary structure could pose a fire risk to rapid transit systems.
- They could obstruct station fire safety and fire protection facilities such as fire engine access, breeching inlets, fire escape stairs, etc. or interfere with the airflow of rapid transit system vent shaft if not controlled.
- Scaffold and maintenance towers could fall onto RTS structures, track way and trains.

Precautionary measures and safety control

- Tent and temporary structures must be erected outside the 1st reserve of viaduct and at grade RTS structures.
- Tent and temporary structures must not obstruct fire engine access, breeching inlets, fire escape stairs, etc. or interfere with the airflow of rapid transit systems vent shaft.
- Fire fighting equipment such as fire extinguishers must be provided for tent and temporary structure.
- LPG gas cylinder and cooking, ceremonies involving burning of incense must be at least 20m away from the viaduct and at grade RTS structures.

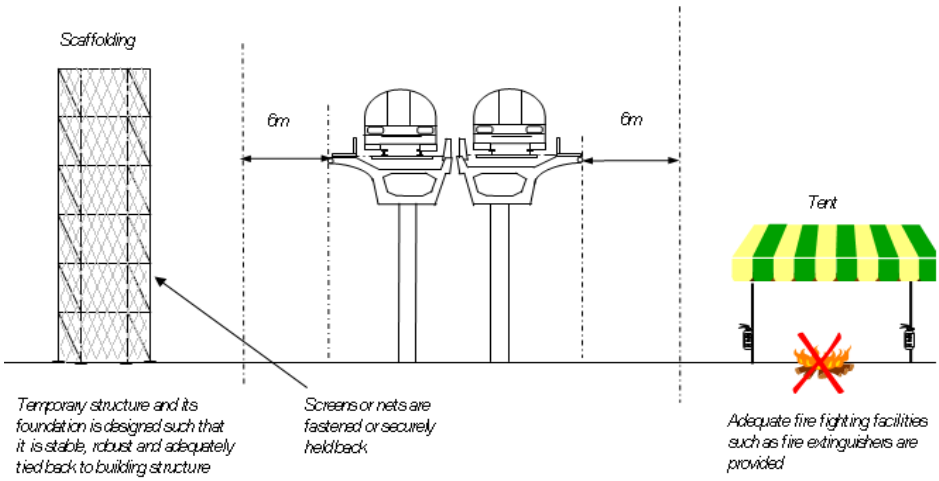


**F**igure 7-1
**E**rection of scaffold, tent or other similar temporary structure

**F**igure 7-2
Tents and organised activities of trade fair, fun fair, religious ceremony, etc outside 1st reserve

- The following restricted activities for erection of temporary sheds/tents/shelters are not required to apply and obtain permission from LTA:
  - More than 10m from elevated railway structures, fence of at grade railway structures
  - **F**lammable fluid such as LPG at least 20m from elevated railway structures, fence of at grade railway structures

- Scaffold and maintenance tower structures must be designed by a qualified person to be stable and robust. They must be supported on firm ground and platform designed and checked by a PE(Civil).

- They must be erected and supervised by qualified scaffold erector and supervisor in accordance with MOM's requirements.

- Scaffold and maintenance towers must be braced and tied back to building if they are taller than the viaduct.

- Safety nets must be installed on scaffold near and facing the railway to prevent materials or object from falling onto the elevated and at grade RTS structures. The materials used should be robust and durable and must be properly secured.

- Scaffold and maintenance towers must be designed and erected so that no one can reach or access to the RTS viaduct.

**F**igure 7-3
Scaffold with safety nets erected facing RTS. Scaffold tied-back to building

## 2.8 Planting of tree with full grown height exceeding above the parapet or wing wall of the railway

PLANTING OF TREE

Possible risks

- Leaves and branches could fall on RTS viaduct or at grade tracks affecting train operations.
- Branches of tree could grow and spread into trainway.

Precautionary measures and safety control

- Planting of shrubs is allowed under the viaduct provided they do not obstruct the access for inspection and maintenance of viaduct structure and bearing.
- Species of tree selected to plant near viaduct should comply with the condition that its branches when full grown above the viaduct level do not encroach within 3m from the edge of viaduct. (See Figure 8-1)
- Condition for maintaining the trees/plants such as pruning, etc
  Lifting equipment used should observe conditions in sections 2.2 and 2.3.

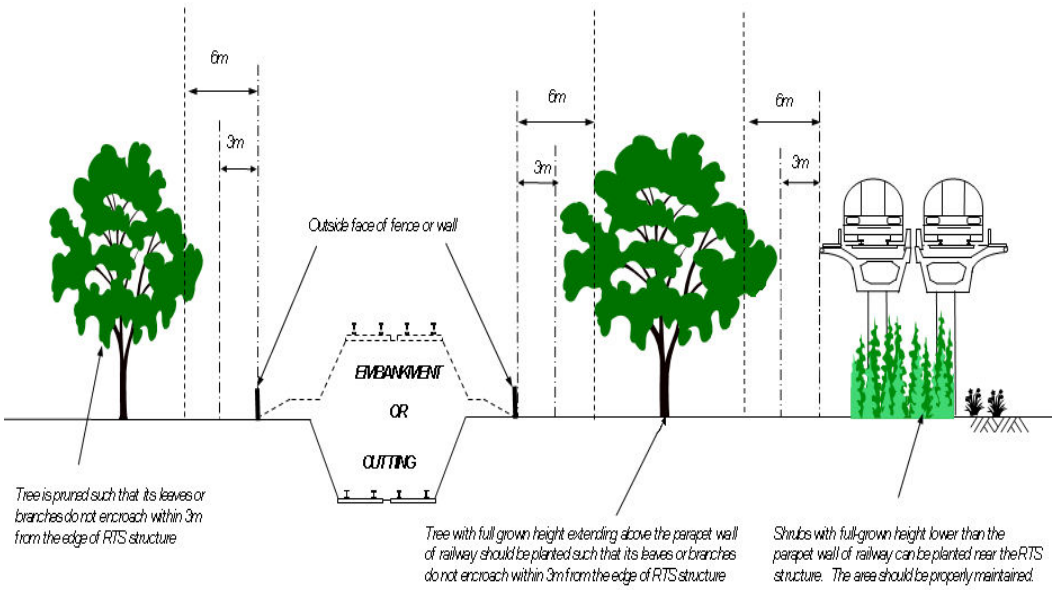


Figure 8-1
Planting of tree or shrubs

**F**igure 8-2
Branches of tree when full grown above RTS viaducts at least 3m clear edge of viaducts

## 2.9 Use of explosive material for purpose of blasting, demolition or removal of rocks

BLASTING

Possible risks

- Blasting could damage RTS structures if not controlled.
- Debris from blasting could be projected to trackway and hit passing trains.

Precautionary measures and safety control

**F**igure 9-1
Removal of rock outcrop using explosives

- Blasting using explosives is not permitted within the railway protection zone of viaduct and railway safety zone of underground rapid transit system structure.
- In special case LTA could allow blasting using explosives within the railway protection zone of viaduct. This must comply with the following conditions:
  - Detail proposal for blasting including calculations must be submitted for LTA's acceptance.
  - **V**ibration generated at viaduct structure should be less than 15mm/s peak particle velocity.
  - **F**ree face of blast must be away from the rapid transit system structure.
  - Measures must be provided to prevent flying fragments during the blast from hitting passing trains.

- Blasting proposal and operations must be carried out by a qualified practitioner.

- Non-explosive materials such as non-detonating rock breaking cartridge to split rock or boulders may be used outside the 1st reserve. This is subject to meeting the precautionary measures and safety control above for special case blasting.

## 2.10 Construction of tunnel and related underground facility

### CONSTRUCTION OF TUNNEL AND RELATED UNDERGROUND FACILITY

Possible risks

- Tunnelling works may cause excessive ground loss and vibration affecting the rapid transit system structures and their foundation.

- Excavation for launching, jacking and receiving shafts, access adit, etc could result in ground movement affecting the rapid transit system structures and safe train operation.

Precautionary measures and safety control

- Best industry practice and procedure should be analysed to minimise ground loss during tunnelling.

- Submit an engineering works proposal to show the works meet requirements in the Code of Practice for Railway Protection. This should include engineering assessment of the impacts of the work on the rapid transit system structures and foundation prepared by a PE (Civil) of the relevant experience.

- Positive support to the ground at the face, around the shield, etc must be provided to prevent excessive ground loss.

- Tail end of tunnel must be continuously grouted.

- Temporary or permanent tunnel linings should be built to provide immediate support to the excavated ground.

- Watertight permanent lining must be installed on the tunnel once excavated.

- For mined tunnel, the sequence of excavation, installation of immediate ground supports, provision of pipe arch roofing and stabilisation of ground before excavation with ground improvement methods, ground probing, etc should be carefully studied and adopted to maintain stability of the face and the temporary tunnel lining.

- It is also important to establish contingency action plan so that any potential risk or sign of impending failure could be immediately rectified.

- The rapid transit system structures must be instrumented monitored during the work.

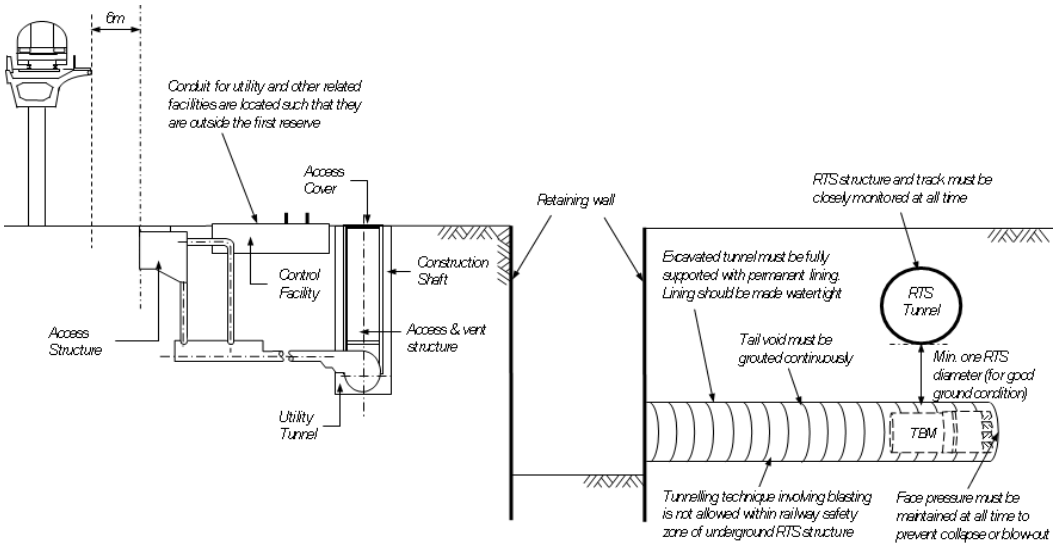


**F**igure 10-1
Construction of tunnel and related underground facility

**F**igure 10-2
TBM tunnelling for Link Sewer of DTSS

**F**igure 10-2
Mined section for construction of box culvert under Buona **V**ista MRT Station. Temporary piped roof with steel frames at close spacing to support excavation

**F**igure 9-3
Temporary tunnelling works for construction of new station adjacent to Harbourfront MRT Station

Chapter 3

# APPLICATION FOR PERMISSION TO CARRY OUT RESTRICTED ACTIVITIES

## 3.1 General

This section stipulates the submission process for obtaining the Authority's permission to carry out any restricted activities within the railway protection and safety zones.

## 3.2 Application for permission to carry out trench excavation for services laying

For proposal involving any excavation of trenches for services laying, the application shall be made using Form LTA DBC RAIL-S1. Clearance is not required if the trench excavation of depth is less than 2m and are located:

- More than 6m from edge of RTS viaduct, elevated stations & fence of depot;
- More than 6m from fence of at grade railway structures.

## 3.3 Application for permission to erect tents

For proposal involving any erection of tents for the purpose of trade fairs, fun fairs, exhibitions, entertainment, night markets, religious functions or ceremonies, the application shall be made using Form LTA DBC RAIL-S2. Clearance is not required if these conditions are met:

- Temporary sheds/tents/shelters are located more than 10m from elevated railway structures, fence of at grade railway structures.
- Flammable fluid such as LPG. diesel used is more than 20m from elevated railway structures, fence of at grade railway structures

## 3.4 Application for permission to carry out other restricted activities:

3.4.1 All applications for obtaining permission to carry out any restricted activity must include one set of the following items:

(a) Layout plan and section showing the location of the restricted activities relative to the rapid transit systems structure;

(b) Method statement of work describing the type of restricted activities to be carried out and showing a step by step sequence of carrying out each phase of these activities;

(c) Risk assessment report identifying all possible risks that may be posed to the rapid transit systems and a description (with sketches if necessary) of the safety and precautionary measures to mitigate these risks;

(d) Write-up on contingency plan and emergency procedure describing the activities or actions that would be implemented and availability of materials and equipment at site to deal with situation identified triggered by accidents;

(e) Call-up list stating the name and contact number of all the key personnel including the qualified person, the project manager, the site supervisors, etc. The list shall be updated whenever there are changes and shall be resubmitted to the Authority for record; and

(f) **F**orm LTA DBC RAIL-**EXE**MPT (where applicable).

3.4.2 **F**or proposal involving any movement or operation of cranes or other mechanical equipment in the vicinity of elevated or at grade RTS structures, the application shall include by the following additional items :

(a) Complete list and details of machinery, equipment, etc. to be used;

(b) Names of qualified site supervisors, safety officers, lifting supervisors and machinery operators with a copy of their certificates of competency;

(c) Copy of test certificates of lifting appliances that will be used;

(d) Calculations to check on the stability of the working platform or foundation and the access for the machines, etc;

(e) Calculations on design of tie-back for tower crane (where applicable); and

(f) **F**orm LTA DBC RAIL-SUP**V**.

3.4.3 **F**or proposal involving any drilling or boring works, the applicant must use **F**orm LTA DBC RAIL-SUR**VEY** – Application for verification of drilling positions. This includes hardcopy and softcopy of survey plan showing:

a) <u>Hardcopy of submission</u>
- Topography and ground features details
- Cadastral Lot Information
- Railway Information eg track centreline & level, track name, 1st & 2nd reserve lines where applicable
- Cadastral coordinates of Ground Instrumentation positions/offset distance from closest viaduct columns

- List of instrument to be checked
- Certified by Registered Surveyor

b) Softcopy of submission
- Autocad or Microstation
- Cadastral True X and **Y** positions
- Scale 1:1

3.4.4 **F**or proposal involving any storage of material, fluid and diesel/petrol powered equipment etc., the application must include the following additional information:

(a) Calculations to check the imposed load on the rapid transit systems structure due to the storage of material, etc; and

(b) Calculations to check the bearing capacity of the ground on which the material will be stored.

(c) Calculations to check fire load on the RTS structures if combustible materials are placed close to the RTS structures.

(d) Where proposal involves use of crane or other major mechanical equipment documents listed in clause 3.4.2 should also be submitted.

(e) Details and location of fire fighting equipment or facilities where there are combustible materials and diesel/petrol powered equipment

3.4.5 **F**or proposal involving any excavation, earthworks or tunnelling, the application should include the following additional items :

(a) **E**ngineering evaluation report satisfying the requirements in Section 3 of Part II of the Code of Practice for Railway Protection; and

(b) Instrumentation proposal satisfying the requirements in Section 4 of Part II of the Code of Practice for Railway Protection.

3.4.6 **F**or proposal involving any dredging of sea beds or river beds and anchoring of vessels, the application should include the following additional information:

(a) **E**ngineering evaluation report satisfying the requirements in Section 3 of Part II of the Code of Practice for Railway Protection; and

(b) Instrumentation proposal satisfying the requirements in Section 4 of Part II of the Code of Practice for Railway Protection.

(c) Plan showing existing levels and proposed level of cut. Pre and post sounding must be carried out to verify them.

(d) Precautionary and safety measures to prevent damage of RTS structures.

(e) Pre-condition survey report of RTS structures. This should be followed by post condition survey report after the dredging work.

3.4.7 For proposal involving any erection of scaffolds, the application should include the following additional information:

(a) Details and calculations showing that the scaffolds are stable, robust and tied back to the superstructure so that they will not collapse; and

(b) Design of the foundation supporting the scaffoldings.

3.4.8 For proposal involving blasting under special case, the application should include the following information :

(a) An analysis by a qualified practitioner to check the vibration induced at the rapid transit systems structure due to the explosion;

(b) Instrumentation proposal to monitor the vibration levels at the rapid transit systems structure.

(c) Proposal of trial blast outside railway protection zone. This shall be follow-up with a report submission.

## 3.5 Endorsement by Qualified Person

All applications involving any engineering design details and calculations shall be prepared and endorsed by a Professional Engineer (Civil).

## 3.6 Exemption

The Authority may, subject to such terms and conditions as it thinks fit to impose, exempt any person or class of persons or any restricted activity from any of the provisions of the Rapid Transit Systems (Railway Protection, Restricted Activities) Regulations. All application for such exemption shall be made using Form LTA DBC RAIL-EXEMPT.

Chapter 4

# RISK ASSESSMENT

## 4.1 General

Any person who plans to carry out restricted activities in railway protection and safety zones must manage the risks posed by his activities in the rapid transit system. Clause 3.4.1 of Chapter 3 requires applicant to conduct a risk assessment identifying all the hazards his work would subject the rapid transit systems to and submit a risk assessment report to the Authority. This process is part and integral of the risk management duties the applicant must take to ensure that the activities undertaken by him are safe and not affect the operation of the railway.

Risk management with regard to the rapid transit system basically involves hazard evaluation, assessing or evaluating the risks from any activities and providing and implementing the safety measures to eliminate, mitigate and control the risks and monitoring the works so that any necessary contingency actions can be taken so that the activities would not harm others. This process should be carried out throughout the duration when the activities are carried out. It would entail and include the following to effectively control the risks:

1. A through examination of the work process, the machineries, equipments and material used;
2. Identifying and analysing all possible hazards;
3. Quantifying and evaluate the risks posed by these hazards to the rapid transit systems;
4. Record the finding and develop safety and precautionary measures to eliminate and reduce the hazards and thus mitigate the risks;
5. Implement and apply the measures identified;
6. Monitor and review the activities and take necessary actions to mitigate any residual risks.

A risk register prepared by the Authority is included in this guide for reference only. Appendices to this register are definition of term used in the register and a risk matrix table. This table categorises the level, likelihood, frequency of the risks and hazard resolution matrix used in the risk register. The register and its appendices serve to help applicant in preparing risk assessment report.

An applicant for permission to carry out restricted activities in railway protection and safety zones must prepare his own risk assessment report based on the restricted activities intended to carry out for submission to the Authority. Generally there are three basic steps to be carried out in sequence when conducting a risk assessment. They are as follows:

## 4.2 Identification of hazards

All possible hazards of the proposed restricted activities must be identified during the planning stage. The sources or situation that can endanger the railway causing

damage of rapid transit systems structures and harm persons travelling on the train and accidents resulting in injuries or even fatalities of train passengers must be recognised. These can be due to the proposed construction or organised activities, the movement and operation of equipment/plant used to carry out the construction activities. It is only with identifying the hazard that the risk associated with it can be controlled.

The possible hazards of the different restricted activities shall not be limited to those identified in Chapter 2 of this guide. There are other scenarios where the hazards can occur causing damage to railway structures endangering the rapid transit systems could occur when restricted activities, movement and operation of equipment are carried out in different conditions and situations. In order to effectively identifying the hazards, it is necessary to have available as much information as possible on the site layout and working environment, work process or flow of the activities, existing and proposed site conditions affecting the working environment, details of machineries, tools, and hazardous materials used, relevant test record, inspection records and certificates, competency and responsibilities of the operators, supervisors, project officers and safety officers, relevant code of practice, specifications and legislations

## 4.3 Risk Evaluation

This step involves estimating the levels of risk posed to the rapid transit systems from the hazards identified and their acceptability. This could then be used to work out and prioritise actions to control the hazards and mitigate the risks. In evaluating the risk it is necessary to determine the expected severity of the hazard and quantify the likelihood of occurrence of the incident or accident to the rapid transit system. These could be estimated by looking at the effectiveness of any existing control measures, compare with existing best practices and deciding how the practices could be improved to get rid of the risk altogether or control the risks effectively so that any accident is unlikely. Once the severity and occurrence are determined the risk level could be assessed using a risk matrix. Example of the risk matrix is given in the appendices of the risk register for the different levels of risks and their acceptability.

## 4.4 Risk Control

Risk controls should be determined based on the risk levels and are selected to remove or reduce the risk level to an acceptable level. It is important the risk controls are practical and effective. The risk controls should not be limited to those shown in the precautionary and safety control of Chapter 3.

To be effective in controlling risk poses to the rapid transit systems, the risk should be totally removed or eliminated in the first instance. It is important to remember that the first step would be to eliminate the risk at the source. This could be achieved by selecting appropriate and suitable equipment/plant and method of construction such that it will pose no risk to the railway. If this is not possible, then other measures to reduce risks to an acceptable level must be considered. Examples of the measures include provide physical means to control restricted activities, erect physical barriers to restrict operations of

equipment/plants, provide a safe and stable working platforms for equipment/plants, install safety measures on equipment/plants, install protective structure to shield the railway and passenger from the dangers, etc.

Other means to reduce the risk levels would be to use alternative method or equipment that are less risky, re-engineer the work process and working environment, provide physical controls in the operating procedures and physical barriers to prevent accidents or incidents.

Administrative controls should only be used when other measures are not possible. **E**xample of administrative controls include implementing procedural checks and close site control and supervision on the each stage of the restricted activities and equipment/plants used, standing supervision by supervising Qualified Person.

Restricted activities shall not commence until risk assessment report including the risk control are reviewed and approved by the Authority.

## APPENDICES

A Standard application forms

Application for permission to carry out trench and pit excavation within railway protection zone

Application for permission to erect temporary sheds/tents/shelters within railway protection zone

Undertaking to supervise crane operation within railway protection and safety zones

Application for verification of reserve lines & drilling positions

Application for exemption

B Risk Assessment

Risk Register

Definitions of terms in the Hazard Register

Risk Matrix Table

RAPID TRANSIT SYSTEMS ACT (CHAPTER 263 A)
RAPID TRANSIT SYSTEMS (RAILWAY PROTECTION, RESTRICTED ACTIVITIES) REGULATIONS

## Application for Permission to Carry Out Trench and Pit Excavation Within Railway Protection Zone

This form may take you 5 minutes to fill in.
You will need the following information to fill in the form:
(a) Project title and description of works
(b) Dates of commencement and completion works
(c) Location of works
(d) Name, address and contact/ fax no. of engineer-in-charge
(e) Name and contact no. of site supervisor

Explanatory notes:

(a) Trench and pit excavations within the railway protection zone is a restricted activity in the schedule of the Rapid Transit Systems (Railway Protection, Restricted Activities) Regulations; These include:-
   (i) All trenches and pits which are within the railway protection zone of any part of a railway which is below the ground; and
   (ii) All trenches and pits which are within the railway protection zone of any part of a railway which is at grade or above the ground except those mentioned in paragraph 2 (b) below.

   Application shall be made to the Land Transport Authority for permission to carry out these activities using the prescribed form.

(b) Permission from the Authority is <u>not</u> required for excavation of trenches and pits that are less than 2 meters deep and are located:-
   (i) At least 6 meters beyond the outermost edge of any part of MRT/LRT viaduct structures, above ground MRT/LRT stations, above ground rapid transit system depot; or
   (ii) At least 6 meters clear of the fencing of railway which is at grade.

Please complete the application form and submit/ fax it with the following documents to:

Deputy Director
Development and Building Control Division
Land Transport Authority
251 North Bridge Road
Singapore 179102
Fax No: 63328223

1. Site plan (to scale)
2. Layout plan indicating location of proposed works with respect to the railway protection zone.
3. Plan and cross-sections (to scale) indicating :
   (a) Trench dimensions & maximum excavation depth
   (b) * Machine clearance below MRT/LRT viaduct
   (c) * Temporary works details
   (d) * Piling details
4. Method statement for proposed works
5. Certificates of machines and operators
6. Name, identity certificate and contact number of supervisor from Services Department

* Delete where not applicable

Deputy Director
Development and Building Control Division
Land Transport Authority
251 North Bridge Road
Singapore 179102
Fax No: 63328223

1 Project title and description of works :

_____

_____

2 Commencement date : _____ Completion date :_____

3 Location :

_____

4 I understand that works within the railway protection and safety zones shall not start on site unless written clearance for commencement of works is obtained from the Land Transport Authority.

| | |
|---|---|
| Name of Engineer-in-Charge<br><br>Date | Signature<br><br>Contact No:<br>Fax No: |
| Name of Supervisor | Contact No: |
| Address of Engineer-in-Charge | For Official Use Only<br>File Ref : LTA/DBC/_____<br>Received date : _____<br>Doc id : _____ Initial : _____<br>Given to OIC _____ on _____ |

For Official Use Only

☐ We have in-principle no objections to your proposal. You are allowed to commence works on site. Your works shall comply with the Code of Practice for Railway Protection and the Rapid Transit Systems (Railway Protection, Restricted Activities) Regulations.

☐ The proposal falls outside the railway protection zones. Clearance is not required.

☐ You did not fully provide the documents required. Please provide documents relating to item no. _____ (see page 1).

Please contact _____ at Tel: _____ or Fax: 63328223 for any enquiry.

for DEPUTY DIRECTOR
Development & Building Control

Doc id : _____

cc: SMRT Fax: 64565251 / SBST Fax: 63889361 (* Delete where not applicable)

RAPID TRANSIT SYSTEMS ACT (CHAPTER 263 A)
RAPID TRANSIT SYSTEMS (RAILWAY PROTECTION, RESTRICTED ACTIVITIES) REGULATIONS

Application For Permission To Erect Temporary Sheds/Tents/Shelters Within Railway Protection Zone

| |
|---|
| This form may take you 5 minutes to fill in.<br>You will need the following information to fill in the form:<br>(f) Title and description of activities<br>(g) Dates of commencement and completion works<br>(h) Location of activities<br>(i) Name, NRIC no., address and contact/ fax no. of applicant<br>(j) Name, NRIC no. and contact no. of supervisor at site |

Explanatory notes:

(a) The erection of temporary sheds, tents and shelters for the purpose of trade fairs, fun fairs, exhibitions, entertainment, night markets, religious functions or ceremonies within railway protection zone is a restricted activity in the schedule of the Rapid Transit Systems (Railway Protection, Restricted Activities) Regulations. Application shall be made to the Land Transport Authority for permission to carry out these activities using the prescribed form except those mentioned in paragraph (b) below.

(b) Permission from the Authority is <u>not</u> required for erection of temporary sheds, shelters and tents if they meet the following requirements:
   (i) The sheds/tents/shelters are at least 10m beyond the outermost edge of any above ground railway structures or fencing of at grade railway, and;
   (ii) Liquefied petroleum gas (LPG) cylinder where it is used is placed at least 20m away from the outermost edge of any above ground railway structures or fencing of at grade railway.

---

Please complete the application form and submit/ fax it with the following documents to:

Deputy Director
Development and Building Control Division
Land Transport Authority
251 North Bridge Road
Singapore 179102
Fax No: 63328223

1. Site plan showing the location of activities
2. Layout plan indicating the nearest distance of the following items to the Rapid Transit Systems structures shall be indicated.
   (a) All tents, stalls and equipment
   (b) Storage and placing of things such as display of goods, display panels, tables and chairs
   (c) Inflammable fluid (such as gas cylinder, petrol) burning of incense, etc.
   (d) Fire extinguishers
   (e) *Lifting appliances such as crane, lorry crane to be used for the erection, etc.

3. The following information should also be provided:
   (a) Types and details of stalls and equipment including height.
   (b) Details of fire extinguishers
   (c) *Test certificates of lifting appliances and operators' certificates.

* Delete where not applicable

Deputy Director
Development and Building Control Division
Land Transport Authority
251 North Bridge Road
Singapore 179102
**F**ax No: 63328223

Title and description of activities :

1 _____

2 Commencement date : _____ Completion date : _____

3 Location :

_____

4 I understand that the above activities within the railway protection zone including the erection of tent and mobilisation of equipment shall not start on site unless written permission is obtained from the Land Transport Authority.

| | |
|---|---|
| Name of Applicant<br><br>Date | Signature<br><br>NRIC no.:<br>Contact No:<br>**F**ax No: |
| Name of Supervisor at site | Contact No:<br>NRIC No: |
| Address of Applicant | **F**or Official Use Only<br>**F**ile Ref : LTA/DBC/_____<br>Received date : _____<br>Doc id : _____ Initial : _____<br>Given to OIC _____ on _____ |

**F**or Official Use Only

☐ We have in-principle no objection to your proposal. **Y**ou are allowed to commence site preparation. **Y**our proposal shall comply with the Code of Practice for Railway Protection and Rapid Transit System (Railway Protection, Restricted Activities) Regulations. All tents, stall, equipment and fire extinguishers shall be erected or placed at location shown on the plan.

☐ The proposal falls outside the railway protection zones. Clearance is not required.

☐ **Y**ou did not fully provide the documents required. Please provide documents relating to item no. _____ (see page 1).

Please contact _____ at Tel: _____ or **F**ax: 63328223 for any enquiry.

for D**E**PUT**Y** DIR**E**CTOR
Development & Building Control

Doc id : _____

cc: SMRT **F**ax: 64565251 / SBST **F**ax: 63889361 (* Delete where not applicable)

UNDERTAKING TO SUPERVISE CRANE OPERATION
WITHIN RAILWAY PROTECTION & SAFETY ZONES

| |
|---|
| This form may take you 5 minutes to fill in.<br>You will need the following information to fill in the form:<br>(k) Project title and brief description of works<br>(l) Lot no., TS/ MK no. and road name<br>(m) Name of qualified person<br>(n) Company name, address, contact and fax nos. of qualified person<br>(o) Name of assignee (if appointed by qualified person) |

Please complete the application form and submit it to:
Deputy Director
Development and Building Control Division
Land Transport Authority
251 North Bridge Road
Singapore 179102

| SECTION I DETAILS OF WORKS | | |
|---|---|---|
| Project title and brief descriptions of work : | | |
| *Lot/ Plot | *TS/MK | Road/ Street |
| SECTION II APPOINTMENT OF QUALIFIED PERSON | | |
| (1) I am the appointed qualified person to provide full time standing supervision of movement and operation of any crane, whether fixed or mobile, hoist, ladder, drilling or piling equipment, excavator or any other mechanical equipment or vehicle within the railway protection and safety zones;<br>(2) I undertake to fully discharge the duties stipulated in appendix of this form; and<br>(3) I will take reasonable steps and exercise due diligence to ensure that works are carried out in accordance with the approved plans/details and the Rapid Transit Systems (Railway Protection, Restricted Activities) Regulations. | | |
| SECTION III APPOINTMENT OF ASSIGNEE (IF ANY) | | |
| (1) I hereby appoint _____ to act on my behalf and to suitably discharge my responsibility as required in Section II above in the event of my absence.<br>(2) The above assignee is a qualified Resident Engineer accredited with Building and Construction Authority or Joint Accreditation Committee of the Institution of Engineers Singapore and the Association of Consulting Engineers Singapore. I attach a copy of his certificate for your reference and acceptance.<br>(3) Notwithstanding such assignment, I shall be fully responsible for all actions taken by my assignee with or without my prior consent or sanction. | | |
| Name & Signature of Qualified Person | Company and Address of Qualified Person | |
| Contact No.: | Fax No.: | Date: |

* Delete where not applicable

## APPENDIX – DUTIES OF QUALIFIED PERSON

In carrying out his duty of ensuring the safety of the rapid transit systems against the movement and operation of any crane, drilling or piling equipment, excavator or any other mechanical equipment or vehicle, a qualified person shall :

1. Be responsible to ensure that works carried out within the railway protection and safety zones are safe and that they do not infringe the requirements of the Rapid Transit Systems (Railway Protection, Restricted Activities) Regulations as amended from time to time;

2. Notify the Authority and seek approval at least two weeks in advance of commencement of work within the railway protection zone;

3. **E**nsure that working platforms for supporting the cranes, piling machines or any other mechanical plant are stable before use and during the times they are in use and as work progresses. Should there be changes in the site conditions that may affect the safe operation of these plant, he shall assess the situation and certify whether the working platforms are safe before allowing the operation of the crane, piling machines, etc. to continue;

4. Check and look out for potential hazards during such works and ensure that adequate precautionary and safety measures are taken by the contractor, plant and machine operators before allowing them to proceed;

5. Be in attendance on site at all times during the period when such works and activities are carried out;

6. Inspect and check that safety measures implemented on site such as provision of physical barriers or demarcation to prevent encroachment of crane or similar plants are maintained and protected from inadvertent removal or damage;

7. **K**eep a record of test certificates of all cranes, lifting gears and appliances employed at site and also the certification by a Professional **E**ngineer (Mechanical) of mechanical plants used at site;

8. **K**eep a daily register of all the names of site lifting supervisors and crane operators and record them against each works and activities in which they are responsible. The register and a complete set of the certificates of competency of these personnel shall be maintained at site and shall be available for inspection by the Authority's staff;

9. **K**eep and maintain a site diary that states the details of activities carried out within the railway protection zone. The dairy shall record the following:

   (a) Description of site activities;

   (b) Location, orientation and operation duration of each crane, piling machine and other mechanical plant together with the name of the equipment operator;

   (c) Records of site conditions, certification of the stability of the working platform, etc.;

   (d) Records of safety checks and endorsements on cranes and mechanical plants and equipment;

   (e) Records of defects of any of the cranes and other mechanical equipment.

   (f) Records of the incidences whereby the contractor has violated the requirements and conditions imposed by the Authority and the instructions issued by the P**E**.

10. Conduct daily check together with the safety officer, lifting supervisors and crane operators of all mechanical plant and equipment including any lifting gears and appliances to confirm that they are in good working condition before work starts;

11. **E**nsure that site agents, site supervisors, foremen, crane operators and lifting supervisors are briefed and well versed with the requirements and conditions of the Authority for works in the vicinity of the rapid transit systems structure; and

12. **E**nsure that any operation which is likely to endanger railway operation or damage rapid transit systems structures such as unsafe lifting operation, etc. are immediately stopped and reported to the Authority.

# APPLICATION FOR VERIFICATION OF RESERVE LINES & DRILLING POSITIONS

| | |
|---|---|
| Deputy Director<br>Development and Building Control Division<br>Land Transport Authority<br>251 North Bridge Road<br>Singapore 179102 | Instructions<br>(1) This form must be duly completed and submitted to the Department 2 weeks in advance of work.<br>(2) * Delete where not applicable. |

1 Project Title and Description of Works :

_____

_____

2 Location :

_____

3 I attached the following submissions for your verification :

(a) Hardcopy of submission with the following shown*:
Topography and ground feature details
Cadastral Lot Information
Railway Information, eg, track centreline & levels, track name, 1st and 2nd reserve lines where applicable
Cadastral coordinates of Ground Instrumentation positions/ offset distance from closest viaduct column
List of instrument to be checked
Certified by Registered Surveyor

(b) Virus Free Softcopy of the submission with the following requirements :
Autocad R13 or Microstation Format
Cadastral True X and Y positions
Scale 1 : 1

4 I declare that the above information is correct and hereby seek your clearance to :

☐ Commence the pegging of * bored holes/ piling positions on site for your inspection before drilling.

☐ Commence the pegging of reserve lines on site for your inspection.

☐ Others_____

(please tick)

| | | |
|---|---|---|
| Name & Signature of Registered Surveyor | Address of Registered Surveyor | |
| Tel No. : | Fax No. | Date : |

Page 1 of 2

| For Official Use Only | Our Ref : |
|---|---|

☐ We have no objections to your proposal in item 4. You are allowed to commence works on site. Your works shall comply with the Code of Practice for Railway Protection and the Rapid Transit Systems (Railway Protection, Restricted Activities) Regulations.

☐ The proposal falls outside the Railway Protection Zone. Clearance from us is not required.

☐ Our comments on the above application are listed on attached sheet.

Please contact _____ at Tel: _____ or Fax: 3328223 for any enquiry.

for DEPUTY DIRECTOR (DEVT & BLDG CONTROL)

| APPLICATION FOR EXEMPTION | |
|---|---|
| Deputy Director<br>Development and Building Control Division<br>Land Transport Authority<br>251 North Bridge Road<br>Singapore 179102 | Instructions<br>(1) One form is to be used for one regulation/ requirement.<br>(2) *Delete as appropriate.<br>(3) Use separate sheets if space in Section II is insufficient. |

| SECTION I | | |
|---|---|---|
| Project Title | | |
| *Lot/ Plot | *TS/MK | Road/ Street |

| SECTION II | |
|---|---|
| (A) | I hereby apply for an exemption of Regulation no.: _____ of the Rapid Transit Systems (Railway Protection, Restricted Activities) Regulations. |
| (B) | Provision made on *Plan/Site: (List down the areas and attach sketch plans) |
| (C) | Reasons in support of application |

| Name & Signature of Qualified Person | | Address of Qualified Person | |
|---|---|---|---|
| Tel No.: | Fax No.: | Regn No. (*Arch/PE) | Date: |

| FOR OFFICIAL USE ONLY | |
|---|---|
| Remarks : _____<br><br>*Recommended/Not Recommended<br><br>_____ _____<br>Processing Officer Date | *Supported/Not Supported<br><br>_____<br>Assistant Manager<br>Development Control & Route Protection (Rail)<br><br>_____<br>Date |
| Exemption *Allowed/Disallowed<br>Conditions for granted exemption :<br><br>_____<br>_____<br>_____<br>_____<br><br>_____ _____<br>Deputy Director Date<br>Development & Building Control Department<br>Land Transport Authority | |

Page 2 of 2

Risk Register
Notes:
This applies to all development & building works and restricted activities within the railway protection zone of the Rapid Transit System structures

| 1 | 2 | 3 | 4 | 5 | 6 | 7 | 8 | 9 | 10 | 11 | 12 |
|---|---|---|---|---|---|---|---|---|---|---|---|
| No. | Risk | Effects | Cause of Risk | Risk Severity | Risk Frequency | Risk Class | Control Measures[1] | Hazard Owner | Residual Risk Severity | Residual Risk Frequency | Residual Risk |
| 1 | Toppling of machinery or crane onto RTS viaduct or above ground structure | (a) Structural damage or collapse of RTS viaduct or above ground structure<br>(b) Hit moving train<br>(c) Disruption to train services or station operations<br>(d) Injury and/ or fatalities of public | Bearing failure in soft ground or soft spot leading to crane toppling | I Catastrophic | II Probable | A Intolerable | Ensure PE (Civil) plans and designs crane's access, check platform condition and provide hardcore and steel plates to distribute the load where required. Outriggers must be fully extended where possible. | PE (Civil) | IV Negligible | IV Remote | D Negligible |
| | | | Structural failure due to overloading of crane | I Catastrophic | II Probable | A Intolerable | Ensure safe load indicator is installed and it functions properly. Check that SWL audio warning is working properly. | Contractor | IV Negligible | IV Remote | D Negligible |
| | | | | | | | Check that intended load is within SWL of crane using crane loading chart. | Contractor | IV Negligible | IV Remote | D Negligible |
| | | | Using equipment or crane with poor condition leading to structural failure | I Catastrophic | II Probable | A Intolerable | Ensure PE (Mechanical) provides inspection and certification of crane. All cranes used must have valid LM certifications. | PE (Mechanical)<br>Contractor | IV Negligible | IV Remote | D Negligible |
| | | | | | | | Ensure regular inspection and maintenance of crane and equipment. | Contractor | IV Negligible | IV Remote | D Negligible |
| | | | Failure of lifting gears | I Catastrophic | II Probable | A Intolerable | Ensure slings, wire ropes, shackles have valid certificates and that they are in good conditions. | Contractor | IV Negligible | IV Remote | D Negligible |
| | | | Accident during hoisting, loading, unloading of materials | I Catastrophic | II Probable | A Intolerable | Ensure full time lifting supervisor is provided for all lifting operation. | Contractor | IV Negligible | IV Remote | D Negligible |
| | | | | | | | Ensure tag line is used when hoisting equipment and material. | Contractor | IV Negligible | IV Remote | D Negligible |
| | | | | | | | Ensure rigger/ signal man is provided during crane operation. | Contractor | IV Negligible | IV Remote | D Negligible |
| | | | Crane encroaching 1st reserve | I Catastrophic | II Probable | A Intolerable | Ensure full time PE (Civil) [or his assignee] is provided for all lifting operation within 1st reserve. | PE (Civil) | IV Negligible | IV Remote | D Negligible |

[1] Control measures in addition to the following:

(a) RTS (Development & Building Works in Railway Corridor & Railway Protection Zone) Regulations:
Regulation 9 requires the developer to appoint a qualified person to supervise the development and building works. No person will be allowed to carry out any development or building works except under the supervision of the appointed qualified person
Regulation 13 empowers LTA to penalise any person who carries out, or permits or authorises the carrying out of any development or building works without LTA's clearance. The penalties will be a maximum fine of $5,000 and in the case of a continuing offence, a fine of $100 for each day that the offence continues after conviction.

(b) RTS (Railway Protection, Restricted Activities) Regulations require any person intending to carry out restricted activities in Railway Protection Zone to obtain prior permission from LTA before commencement of work.

Risk Register
Notes:
This applies to all development & building works and restricted activities within the railway protection zone of the Rapid Transit System structures

| 1 | 2 | 3 | 4 | 5 | 6 | 7 | 8 | 9 | 10 | 11 | 12 |
|---|---|---|---|---|---|---|---|---|---|---|---|
| No. | Risk | Effects | Cause of Risk | Risk Severity | Risk Frequency | Risk Class | Control Measures[1] | Hazard Owner | Residual Risk Severity | Residual Risk Frequency | Residual Risk |
| | | | | | | | | | | | |
| | | | | | | | Ensure physical barriers are to be provided to prevent encroachment at site. | Contractor | IV Negligible | IV Remote | D Negligible |
| | | | | | | | Ensure foundation supporting tower crane is adequately designed and tower crane is erected to its next height only when it is adequately braced and tie back such that the jib will fall outside the 1st reserve in the event of any collapse. | PE (Civil) Contractor | IV Negligible | IV Remote | D Negligible |
| | | | | | | | Ensure protective cover is provided over the train way if lifting is carried out over the operating railway (eg Dover Station and CCL3 Bishan Station construction works). | PE (Civil) Contractor | IV Negligible | IV Remote | D Negligible |
| | | | | | | | Ensure PE (Mechanical) inspects and certifies at monthly interval that all mechanical parts, lifting appliances and accessories are in good working conditions. | PE (Mechanical) Contractor | IV Negligible | IV Remote | D Negligible |
| | | | Accidental swing of crane boom towards viaduct | II Critical | II Probable | A Intolerable | Ensure safe operation zone and safe boom turning demarcation area are marked and identified. | Contractor | IV Negligible | IV Remote | D Negligible |
| | | | | | | | Ensure crane boom is lowered down during non-operation hours and crane boom is faced away from RTS structures. Ensure boom swing device is properly locked. | Contractor | IV Negligible | IV Remote | D Negligible |
| | | | | | | | Ensure full time lifting supervisor is provided for all lifting operation. | Contractor | IV Negligible | IV Remote | D Negligible |

[1] Control measures in addition to the following:

(a) RTS (Development & Building Works in Railway Corridor & Railway Protection Zone) Regulations:
Regulation 9 requires the developer to appoint a qualified person to supervise the development and building works. No person will be allowed to carry out any development or building works except under the supervision of the appointed qualified person
Regulation 13 empowers LTA to penalise any person who carries out, or permits or authorises the carrying out of any development or building works without LTA's clearance. The penalties will be a maximum fine of $5,000 and in the case of a continuing offence, a fine of $100 for each day that the offence continues after conviction.

(b) RTS (Railway Protection, Restricted Activities) Regulations require any person intending to carry out restricted activities in Railway Protection Zone to obtain prior permission from LTA before commencement of work.

Risk Register
Notes:
This applies to all development & building works and restricted activities within the railway protection zone of the Rapid Transit System structures

| 1 | 2 | 3 | 4 | 5 | 6 | 7 | 8 | 9 | 10 | 11 | 12 |
|---|---|---|---|---|---|---|---|---|---|---|---|
| No. | Risk | Effects | Cause of Risk | Risk Severity | Risk Frequency | Risk Class | Control Measures[1] | Hazard Owner | Residual Risk Severity | Residual Risk Frequency | Residual Risk |
| | | | | | | | Ensure crane engine is switched off and crane cabin is locked when no work. | Contractor | IV Negligible | IV Remote | D Negligible |
| | | | Crane operation by uncertified personnel | II Critical | II Probable | A Intolerable | Ensure crane operator is trained and holds valid certification. | Contractor | IV Negligible | IV Remote | D Negligible |
| 2 | Drilling of borehole and temporary or permanent pile into RTS underground structure | (a) Structural damage of RTS underground structure<br>(b) Could be hit by moving train and visa versa<br>(c) Disruption to train services or station operations<br>(d) Injury and/ or fatalities of public | Unauthorised drilling of borehole or pile | II Critical | II Probable | A Intolerable | Ensure railway operator patrols along RTS line to check for and stop unauthorised drilling activities. | Railway operator | IV Negligible | IV Remote | D Negligible |
| | | | Registered surveyor made mistake in borehole positions | II Critical | II Probable | A Intolerable | Ensure pile/ borehole is located at least 6m away from the RTS structure. Frequent checks on pile vertical alignment must be carried out during installation. | PE (Civil) Contractor | IV Negligible | IV Remote | D Negligible |
| | | | | | | | Ensure pile/ borehole is located at least 3m from toe of raker piles supporting RTS viaduct (viaduct from Ulu Pandan to Jurong East). | PE (Civil) Contractor | IV Negligible | IV Remote | D Negligible |
| | | | | | | | Ensure bakau pile terminates at least 3m above the crown of RTS underground structure. These piles are to be installed in pre-determined length to control penetration. | PE (Civil) Contractor | IV Negligible | IV Remote | D Negligible |
| | | | | | | | Ensure clearance from pilecap is sufficient for piling below viaduct. Measures to protect the lightning protection system and earthing pits must be provided. | PE (Civil) Contractor | IV Negligible | IV Remote | D Negligible |
| | | | | | | | Ensure proposed drill holes are verified by S&L. Endorsement by S&L and DBC must be shown on approved plan used for installation. | PE (Civil) Contractor | IV Negligible | IV Remote | D Negligible |

[1] Control measures in addition to the following:

(a) RTS (Development & Building Works in Railway Corridor & Railway Protection Zone) Regulations:
Regulation 9 requires the developer to appoint a qualified person to supervise the development and building works. No person will be allowed to carry out any development or building works except under the supervision of the appointed qualified person
Regulation 13 empowers LTA to penalise any person who carries out, or permits or authorises the carrying out of any development or building works without LTA's clearance. The penalties will be a maximum fine of $5,000 and in the case of a continuing offence, a fine of $100 for each day that the offence continues after conviction.

(b) RTS (Railway Protection, Restricted Activities) Regulations require any person intending to carry out restricted activities in Railway Protection Zone to obtain prior permission from LTA before commencement of work.

Risk Register
Notes:
This applies to all development & building works and restricted activities within the railway protection zone of the Rapid Transit System structures

| 1 | 2 | 3 | 4 | 5 | 6 | 7 | 8 | 9 | 10 | 11 | 12 |
|---|---|---|---|---|---|---|---|---|---|---|---|
| No. | Risk | Effects | Cause of Risk | Risk Severity | Risk Frequency | Risk Class | Control Measures[1] | Hazard Owner | Residual Risk Severity | Residual Risk Frequency | Residual Risk |
| | | | | | | | Ensure pegs for drill holes and guide walls for diaphragm wall, secant piles, etc are set up by registered surveyor on site. | Contractor Registered surveyor | IV Negligible | IV Remote | D Negligible |
| | | | | | | | Arrange for DBC officer to verify pegs (jointly with S&L Division officer if drill holes fall within 1st reserve) before drilling starts. | PE (Civil) Contractor | IV Negligible | IV Remote | D Negligible |
| 3 | Demolition work affecting RTS structure | (a) Excessive vibrations induced on RTS structure<br>(b) Physical damage to RTS underground structure<br>(c) Over loading on RTS underground structure<br>(d) Dust pollution, smoke & exhaust fumes could affect environmental control equipment, activate smoke detectors of fire protection system of station<br>(e) Noise/ dust cause disturbance and inconvenience to travelling public | Unsuitable methods of demolition | III Marginal | II Probable | B Undesirable | Ensure use of hand-held breaker, crusher, diamond cutter, diamond wire saw, stitch coring, hydro-jet (subject to measures to ensure no flooding occur in RTS station), etc. where possible to minimise vibration. | PE (Civil) Contractor | IV Negligible | IV Remote | D Negligible |
| | | | | | | | Ensure measure is provided to prevent cooling water used for coring work from flowing into station premises. | PE (Civil) Contractor | IV Negligible | IV Remote | D Negligible |
| | | | | | | | Ensure cushion to the ground with energy absorbing material is provided to reduce the impact on ground from demolition rubble. | PE (Civil) Contractor | IV Negligible | IV Remote | D Negligible |
| | | | | | | | Ensure blasting is not used for demolition work within railway safety zone. | PE (Civil) Contractor | IV Negligible | IV Remote | D Negligible |
| | | | | | | | Ensure all demolition rubble is discharged outside influence zone of RTS structure to minimise vibration and imposed load on RTS structure. | PE (Civil) Contractor | IV Negligible | IV Remote | D Negligible |
| | | | Excessive imposed loads on RTS structure | III Marginal | II Probable | B Undesirable | Ensure no stockpiling of demolition debris within influence zone of RTS structure to minimise imposed load on RTS structure. | PE (Civil) Contractor | IV Negligible | IV Remote | D Negligible |
| | | | Excessive dust near RTS structure including vent | III Marginal | II Probable | B Undesirable | Ensure effective measure is provided to control the generation of dust. | PE (Civil) Contractor | IV Negligible | IV Remote | D Negligible |

[1] Control measures in addition to the following:

(a) RTS (Development & Building Works in Railway Corridor & Railway Protection Zone) Regulations:
Regulation 9 requires the developer to appoint a qualified person to supervise the development and building works. No person will be allowed to carry out any development or building works except under the supervision of the appointed qualified person
Regulation 13 empowers LTA to penalise any person who carries out, or permits or authorises the carrying out of any development or building works without LTA's clearance. The penalties will be a maximum fine of $5,000 and in the case of a continuing offence, a fine of $100 for each day that the offence continues after conviction.

(b) RTS (Railway Protection, Restricted Activities) Regulations require any person intending to carry out restricted activities in Railway Protection Zone to obtain prior permission from LTA before commencement of work.

Risk Register
Notes:
This applies to all development & building works and restricted activities within the railway protection zone of the Rapid Transit System structures

| 1 | 2 | 3 | 4 | 5 | 6 | 7 | 8 | 9 | 10 | 11 | 12 |
|---|---|---|---|---|---|---|---|---|---|---|---|
| No. | Risk | Effects | Cause of Risk | Risk Severity | Risk Frequency | Risk Class | Control Measures[1] | Hazard Owner | Residual Risk Severity | Residual Risk Frequency | Residual Risk |
| | | | | | | | Ensure netting, filter or suitable screens are provided to screen off dust/ debris. | PE (Civil) Contractor | IV Negligible | IV Remote | D Negligible |
| | | | | | | | Ensure industrial heavy duty vacuum cleaner is provided to remove dust. | Contractor | IV Negligible | IV Remote | D Negligible |
| | | | | | | | Ensure that work is carried out after train operation hour. May need to de-activate the smoke detectors and start work after station down with fire fighting facilities provided. | Contractor | IV Negligible | IV Remote | D Negligible |
| 4 | Flooding or water ingress into RTS underground station | (a) Damage to existing M&E services in RTS station.<br>(b) Disruption to train services or station operations<br>(c) Injury and/ or fatalities of public due to electrocution or drowning | Temporary or permanent openings or entrance in adjacent development lower than flood threshold level of station | II Critical | II Probable | A Intolerable | Ensure flood threshold level for all temporary or permanent openings/ entrances of integrated development complies with the Code of Practice for Surface Water Drainage. | Registered Architect<br>PE (Civil) | IV Negligible | IV Remote | D Negligible |
| | | | | | | | Ensure openings and services penetrations below the flood threshold level are properly sealed and made watertight. | PE (Civil) Contractor | IV Negligible | IV Remote | D Negligible |
| | | | | | | | Ensure structure integrated with RTS underground station is constructed and completed above flood threshold level before puncturing through existing station. | PE (Civil) Contractor | IV Negligible | IV Remote | D Negligible |
| | | | Back flow of water into adjacent development integrated with RTS station | II Critical | II Probable | A Intolerable | Ensure discharge pipes and sewer pipes are provided with a swan neck connection to prevent back flow of water. Invert level of pipe at swan neck location must not be lower than the flood threshold level. | PE (Civil) Contractor | IV Negligible | IV Remote | D Negligible |

[1] Control measures in addition to the following:

(a) RTS (Development & Building Works in Railway Corridor & Railway Protection Zone) Regulations:
Regulation 9 requires the developer to appoint a qualified person to supervise the development and building works. No person will be allowed to carry out any development or building works except under the supervision of the appointed qualified person
Regulation 13 empowers LTA to penalise any person who carries out, or permits or authorises the carrying out of any development or building works without LTA's clearance. The penalties will be a maximum fine of $5,000 and in the case of a continuing offence, a fine of $100 for each day that the offence continues after conviction.

(b) RTS (Railway Protection, Restricted Activities) Regulations require any person intending to carry out restricted activities in Railway Protection Zone to obtain prior permission from LTA before commencement of work.

Risk Register
Notes:
This applies to all development & building works and restricted activities within the railway protection zone of the Rapid Transit System structures

| 1 | 2 | 3 | 4 | 5 | 6 | 7 | 8 | 9 | 10 | 11 | 12 |
|---|---|---|---|---|---|---|---|---|---|---|---|
| No. | Risk | Effects | Cause of Risk | Risk Severity | Risk Frequency | Risk Class | Control Measures[1] | Hazard Owner | Residual Risk Severity | Residual Risk Frequency | Residual Risk |
| | | | Faulty flood protection system installed at station interfaced with development due to poor maintenance | II Critical | II Probable | A Intolerable | Ensure building owner carries out regular maintenance of floodgate (or flood barrier), flood detection sensor, etc. and check water tightness of floodgate, condition of gasket, etc. Annual testing of floodgate must be carried out by building owner and witnessed by DBC officer. | Building owner | IV Negligible | IV Remote | D Negligible |
| 5 | Fire or explosion affecting RTS structures | (a) Structural damage or collapse of RTS station.<br>(b) Disruption to train services or station operations<br>(c) Injury and/ or fatalities of public | Storage of combustible and flammable materials in RTS station | II Critical | II Probable | A Intolerable | Ensure no storage of combustible and flammable materials in RTS station. | PE (Civil) Contractor | IV Negligible | IV Remote | D Negligible |
| | | | | | | | Ensure combustible and flammable materials that may be exposed to sparks are removed. | PE (Civil) Contractor | IV Negligible | IV Remote | D Negligible |
| | | | | | | | Ensure unwanted material is removed out of site for disposal. | PE (Civil) Contractor | IV Negligible | IV Remote | D Negligible |
| | | | | | | | Ensure adequate fire extinguisher is provided at every work area. | PE (Civil) Contractor | IV Negligible | IV Remote | D Negligible |
| | | | | | | | Ensure hoarding located below or within 6m from the edge of RTS above ground structure is constructed using non-combustible material. No fire risk activities are to be carried out within the 1st reserve. | PE (Civil) Contractor | IV Negligible | IV Remote | D Negligible |
| | | | Welding and cutting works in station<br>Explosion of LPG or oxy-acetylene gas cylinders used in hot works | I Catastrophic | II Probable | A Intolerable | Ensure minimum hot work is carried out in RTS station. Hot work (if inevitable) must be carried out during non-operational hour. Hot work permit must be obtained from railway operator and compliance with operator's rules and regulations is required. | PE (Civil) Contractor | IV Negligible | IV Remote | D Negligible |
| | | | | I Catastrophic | II Probable | A Intolerable | Ensure fire hazard activity is carried out within 2-hour fire rated (min) hoarding to separate work area from station area. | PE (Civil) Contractor | IV Negligible | IV Remote | D Negligible |

[1] Control measures in addition to the following:

(a) RTS (Development & Building Works in Railway Corridor & Railway Protection Zone) Regulations:
Regulation 9 requires the developer to appoint a qualified person to supervise the development and building works. No person will be allowed to carry out any development or building works except under the supervision of the appointed qualified person
Regulation 13 empowers LTA to penalise any person who carries out, or permits or authorises the carrying out of any development or building works without LTA's clearance. The penalties will be a maximum fine of $5,000 and in the case of a continuing offence, a fine of $100 for each day that the offence continues after conviction.

(b) RTS (Railway Protection, Restricted Activities) Regulations require any person intending to carry out restricted activities in Railway Protection Zone to obtain prior permission from LTA before commencement of work.

Risk Register
Notes:
This applies to all development & building works and restricted activities within the railway protection zone of the Rapid Transit System structures

| 1 | 2 | 3 | 4 | 5 | 6 | 7 | 8 | 9 | 10 | 11 | 12 |
|---|---|---|---|---|---|---|---|---|---|---|---|
| No. | Risk | Effects | Cause of Risk | Risk Severity | Risk Frequency | Risk Class | Control Measures[1] | Hazard Owner | Residual Risk Severity | Residual Risk Frequency | Residual Risk |
| | | | | | | | Ensure combustible and flammable materials are removed from working area. | PE (Civil) Contractor | IV Negligible | IV Remote | D Negligible |
| | | | | | | | Ensure all welding works are carried out by certified welders. | PE (Civil) Contractor | IV Negligible | IV Remote | D Negligible |
| | | | | | | | Ensure flash back arrester is provided to gas cylinder and cutting torch. | PE (Civil) Contractor | IV Negligible | IV Remote | D Negligible |
| | | | | | | | Ensure each cutting and welding work area is equipped with adequate fire extinguisher. | PE (Civil) Contractor | IV Negligible | IV Remote | D Negligible |
| | | | | | | | Ensure measure is provided to contain flying sparks during cutting or welding works. | PE (Civil) Contractor | IV Negligible | IV Remote | D Negligible |
| | | | | | | | Ensure all gas cylinders are properly secured and standing. | PE (Civil) Contractor | IV Negligible | IV Remote | D Negligible |
| | | | Storage of Class I flammable & Class II & III combustible liquid in petrol kiosk near RTS underground structure | I Catastrophic | II Probable | A Intolerable | Ensure underground storage tank including its related piping, dispensing pumps and sumps for storing Class I flammable and Class II and III combustible liquids are located outside 1st reserve. | PE (Civil) | IV Negligible | IV Remote | D Negligible |
| | | | | | | | Ensure underground storage tank is of double wall construction and equipped with an approved automatic leak detection and monitoring system. | PE (Civil) | IV Negligible | IV Remote | D Negligible |
| | | | | | | | Ensure vault, tank and piping are provided with an approved corrosion protection system. | PE (Civil) | IV Negligible | IV Remote | D Negligible |
| | | | | | | | Ensure tank sump and related piping are equipped with an approved leak detection device. | PE (Civil) | IV Negligible | IV Remote | D Negligible |

[1] Control measures in addition to the following:

(a) RTS (Development & Building Works in Railway Corridor & Railway Protection Zone) Regulations:
Regulation 9 requires the developer to appoint a qualified person to supervise the development and building works. No person will be allowed to carry out any development or building works except under the supervision of the appointed qualified person
Regulation 13 empowers LTA to penalise any person who carries out, or permits or authorises the carrying out of any development or building works without LTA's clearance. The penalties will be a maximum fine of $5,000 and in the case of a continuing offence, a fine of $100 for each day that the offence continues after conviction.

(b) RTS (Railway Protection, Restricted Activities) Regulations require any person intending to carry out restricted activities in Railway Protection Zone to obtain prior permission from LTA before commencement of work.

Risk Register
Notes:
This applies to all development & building works and restricted activities within the railway protection zone of the Rapid Transit System structures

| 1 | 2 | 3 | 4 | 5 | 6 | 7 | 8 | 9 | 10 | 11 | 12 |
|---|---|---|---|---|---|---|---|---|---|---|---|
| No. | Risk | Effects | Cause of Risk | Risk Severity | Risk Frequency | Risk Class | Control Measures[1] | Hazard Owner | Residual Risk Severity | Residual Risk Frequency | Residual Risk |
| | | | | | | | Ensure surface around the dispensing area whether with or without dispensing pump is graded such that any spills will be directed into a drain that flows away from the RTS underground structure. | PE (Civil) | IV Negligible | IV Remote | D Negligible |
| | | | Addition and alteration works in RTS station or affecting station entrance | II Critical | II Probable | A Intolerable | Ensure A&A works do not affect existing means of escape, fire compartment, sprinkler, smoke detector, etc. | Qualified person Contractor | IV Negligible | IV Remote | D Negligible |
| | | | | | | | Ensure clear minimum width for fire escape is maintained at all times during construction. Exiting time must not exceed the time stipulated in the Standard for Fire Safety in RTS. | Qualified person Contractor | IV Negligible | IV Remote | D Negligible |
| | | | | | | | Ensure safe and protected passageway for commuters' access to the station entrance is maintained at all times during construction. | Qualified person Contractor | IV Negligible | IV Remote | D Negligible |
| | | | | | | | Ensure works are carried out after train operation hour if above is not possible. | Qualified person | IV Negligible | IV Remote | D Negligible |
| | | | | | | | Ensure QP designs the relocation of affected fire hydrant, breeching inlets, fireman intercom, etc. | Qualified person Contractor | IV Negligible | IV Remote | D Negligible |
| | | | | | | | Ensure building integrated or interfaced with station is separated from the station by fire shutter of at least 2 hours fire resistance. | Qualified person | IV Negligible | IV Remote | D Negligible |

[1] Control measures in addition to the following:

(a) RTS (Development & Building Works in Railway Corridor & Railway Protection Zone) Regulations:
Regulation 9 requires the developer to appoint a qualified person to supervise the development and building works. No person will be allowed to carry out any development or building works except under the supervision of the appointed qualified person
Regulation 13 empowers LTA to penalise any person who carries out, or permits or authorises the carrying out of any development or building works without LTA's clearance. The penalties will be a maximum fine of $5,000 and in the case of a continuing offence, a fine of $100 for each day that the offence continues after conviction.

(b) RTS (Railway Protection, Restricted Activities) Regulations require any person intending to carry out restricted activities in Railway Protection Zone to obtain prior permission from LTA before commencement of work.

Risk Register
Notes:
This applies to all development & building works and restricted activities within the railway protection zone of the Rapid Transit System structures

| 1 | 2 | 3 | 4 | 5 | 6 | 7 | 8 | 9 | 10 | 11 | 12 |
|---|---|---|---|---|---|---|---|---|---|---|---|
| No. | Risk | Effects | Cause of Risk | Risk Severity | Risk Frequency | Risk Class | Control Measures[1] | Hazard Owner | Residual Risk Severity | Residual Risk Frequency | Residual Risk |
| | | | Building adjacent to RTS above ground structure | II Critical | II Probable | A Intolerable | Ensure building is at least 6m clear or the separation distance calculated for unprotected opening in accordance with the Fire Code, whichever is greater, from the outermost edge of the RTS above ground station/ viaduct. | Qualified person | IV Negligible | IV Remote | D Negligible |
| | | | Building under RTS viaduct | I Catastrophic | II Probable | A Intolerable | Ensure building does not affect the fire fighting facilities for the RTS viaduct. | Qualified person | IV Negligible | IV Remote | D Negligible |
| | | | | | | | Ensure RTS column enclosed within the building is provided with a 25mm thick plaster all round the development. | Qualified person | IV Negligible | IV Remote | D Negligible |
| | | | | | | | Ensure 2-hour fire rated wall/ roof is provided within 6m of the RTS viaduct to protect the viaduct against fire from the development. For window or other opening on the fire rated wall, 2-hour fire rated dampers/ doors/ shutters must be provided. | Qualified person | IV Negligible | IV Remote | D Negligible |
| | | | | | | | Ensure no storage of flammable liquids or highly combustible substances. | Qualified person | IV Negligible | IV Remote | D Negligible |
| | | | Faulty fire protection system such as fire shutters in building integrated with RTS station | I Catastrophic | II Probable | A Intolerable | Ensure building owner carries out regular maintenance of fire shutters, smoke detectors, etc. to ensure they are in good functional conditions. Annual testing of fire shutters must be carried out by building owner and witnessed by DBC officer. | Building owner | IV Negligible | IV Remote | D Negligible |

[1] Control measures in addition to the following:

(a) RTS (Development & Building Works in Railway Corridor & Railway Protection Zone) Regulations:
Regulation 9 requires the developer to appoint a qualified person to supervise the development and building works. No person will be allowed to carry out any development or building works except under the supervision of the appointed qualified person
Regulation 13 empowers LTA to penalise any person who carries out, or permits or authorises the carrying out of any development or building works without LTA's clearance. The penalties will be a maximum fine of $5,000 and in the case of a continuing offence, a fine of $100 for each day that the offence continues after conviction.

(b) RTS (Railway Protection, Restricted Activities) Regulations require any person intending to carry out restricted activities in Railway Protection Zone to obtain prior permission from LTA before commencement of work.

Risk Register
Notes:
This applies to all development & building works and restricted activities within the railway protection zone of the Rapid Transit System structures

| 1 | 2 | 3 | 4 | 5 | 6 | 7 | 8 | 9 | 10 | 11 | 12 |
|---|---|---|---|---|---|---|---|---|---|---|---|
| No. | Risk | Effects | Cause of Risk | Risk Severity | Risk Frequency | Risk Class | Control Measures[1] | Hazard Owner | Residual Risk Severity | Residual Risk Frequency | Residual Risk |
| | | | Building interfaced with RTS ventilation shaft | II Critical | II Probable | A Intolerable | Ensure dust exhaust fumes, etc. generated during construction stage are controlled and not directed towards RTS ventilation shaft or fresh air intake of station. | Contractor | IV Negligible | IV Remote | D Negligible |
| | | | | | | | Design and install filter to prevent dust/ pollution from getting into station. Filters must be designed to meet performance specification such as static pressure loss, etc. | Qualified person<br>Contractor | IV Negligible | IV Remote | D Negligible |
| | | | Tentage with storage of combustible material or with fire hazardous activities | II Critical | II Probable | A Intolerable | Ensure tentage is located outside 1st reserve of RTS above ground structure. It must not block the fire engine access, breeching inlets, escape stairs or interfere with the free flow of air into or out of the ventilation shaft of RTS. | Applicant | IV Negligible | IV Remote | D Negligible |
| | | | | | | | Ensure adequate fire fighting facilities such as fire extinguishers are provided. | Applicant | IV Negligible | IV Remote | D Negligible |
| | | | | | | | Ensure generator used is located more than 30m away from RTS above ground structure. | Applicant | IV Negligible | IV Remote | D Negligible |
| | | | Combustible materials used for monitoring instrument installed in RTS station/ tunnel | II Critical | II Probable | A Intolerable | Ensure combustible materials are not used for construction of fixture and instrument to prevent fire hazard. Power and signal cables are to be made of fire retardant, low smoke, halogen free material. In-situ welding is not allowed. | Contractor | IV Negligible | IV Remote | D Negligible |
| | | | No proper maintenance of vegetation planted near the RTS above ground structure | II Critical | II Probable | A Intolerable | Ensure shrub or vegetation planted near the RTS above ground structure are pruned and maintained regularly to prevent them from catching fire during hot season. | Land owner<br>Railway operator | IV Negligible | IV Remote | D Negligible |

[1] Control measures in addition to the following:

(a) RTS (Development & Building Works in Railway Corridor & Railway Protection Zone) Regulations:
Regulation 9 requires the developer to appoint a qualified person to supervise the development and building works. No person will be allowed to carry out any development or building works except under the supervision of the appointed qualified person
Regulation 13 empowers LTA to penalise any person who carries out, or permits or authorises the carrying out of any development or building works without LTA's clearance. The penalties will be a maximum fine of $5,000 and in the case of a continuing offence, a fine of $100 for each day that the offence continues after conviction.

(b) RTS (Railway Protection, Restricted Activities) Regulations require any person intending to carry out restricted activities in Railway Protection Zone to obtain prior permission from LTA before commencement of work.

Risk Register
Notes:
This applies to all development & building works and restricted activities within the railway protection zone of the Rapid Transit System structures

| 1 | 2 | 3 | 4 | 5 | 6 | 7 | 8 | 9 | 10 | 11 | 12 |
|---|---|---|---|---|---|---|---|---|---|---|---|
| No. | Risk | Effects | Cause of Risk | Risk Severity | Risk Frequency | Risk Class | Control Measures[1] | Hazard Owner | Residual Risk Severity | Residual Risk Frequency | Residual Risk |
| 6 | Excessive vibrations at RTS structures | (a) Damage to existing architectural finishes or M&E fixtures in RTS station.<br>(b) Structural damage or crack on RTS structure.<br>(c) Water ingress at construction joints of segmental lining, etc.<br>(d) Affect track alignment. Derailment of train and injury or fatalities of public | Piling works | III Marginal | II Probable | B Undesirable | Ensure vibration induced at RTS structure is less than 15mm/sec ppv. | Contractor | IV Negligible | IV Remote | D Negligible |
| | | | | | | | Use down-the-hole method, coring, roller bits, etc. which can minimise vibrations | Contractor | IV Negligible | IV Remote | D Negligible |
| | | | | | | | Ensure no percussive method is used for pile installation. | PE (Civil)<br>Contractor | IV Negligible | IV Remote | D Negligible |
| | | | | | | | Ensure no chiselling method is used for pile installation. | PE (Civil)<br>Contractor | IV Negligible | IV Remote | D Negligible |
| | | | | | | | Ensure no vibro-hammer is used for pile installation. | PE (Civil)<br>Contractor | IV Negligible | IV Remote | D Negligible |
| | | | Demolition works | III Marginal | II Probable | B Undesirable | Ensure vibration induced at RTS structure is less than 15mm/sec ppv. | PE (Civil)<br>Contractor | IV Negligible | IV Remote | D Negligible |
| | | | | | | | Ensure no huge hydraulic breaker is used for demolition. | PE (Civil)<br>Contractor | IV Negligible | IV Remote | D Negligible |
| | | | | | | | Ensure no blasting is used for demolition work. | PE (Civil)<br>Contractor | IV Negligible | IV Remote | D Negligible |
| | | | Excavation works involving removal of hard strata | III Marginal | II Probable | B Undesirable | Ensure no blasting is used for removal of hard strata. | PE (Civil)<br>Contractor | IV Negligible | IV Remote | D Negligible |

[1] Control measures in addition to the following:

(a) RTS (Development & Building Works in Railway Corridor & Railway Protection Zone) Regulations:
Regulation 9 requires the developer to appoint a qualified person to supervise the development and building works. No person will be allowed to carry out any development or building works except under the supervision of the appointed qualified person
Regulation 13 empowers LTA to penalise any person who carries out, or permits or authorises the carrying out of any development or building works without LTA's clearance. The penalties will be a maximum fine of $5,000 and in the case of a continuing offence, a fine of $100 for each day that the offence continues after conviction.

(b) RTS (Railway Protection, Restricted Activities) Regulations require any person intending to carry out restricted activities in Railway Protection Zone to obtain prior permission from LTA before commencement of work.

Risk Register
Notes:
This applies to all development & building works and restricted activities within the railway protection zone of the Rapid Transit System structures

| 1 | 2 | 3 | 4 | 5 | 6 | 7 | 8 | 9 | 10 | 11 | 12 |
|---|---|---|---|---|---|---|---|---|---|---|---|
| No. | Risk | Effects | Cause of Risk | Risk Severity | Risk Frequency | Risk Class | Control Measures[1] | Hazard Owner | Residual Risk Severity | Residual Risk Frequency | Residual Risk |
| 7 | Train hitting monitoring instrument/ bracket mounted on tunnel | (a) Structural damage of RTS tunnel and/ or train<br>(b) Derailment of train and disruption to train services or station operations<br>(c) Injury and/ or fatalities of public | Monitoring instrument encroaches the structure gauge<br>Instrument not installed based on approved plan<br>Instrument not secured fixed to RTS structure | II Critical | II Probable | A Intolerable | Ensure registered surveyor carries out structure gauge clearance check for instruments to be installed in trainway. | Registered surveyor<br>Contractor | IV Negligible | IV Remote | D Negligible |
| | | | | | | | Ensure trainway cross sections are verified by S&L. Endorsement by S&L and DBC must be shown on plan approved for installation. | PE (Civil)<br>Contractor | IV Negligible | IV Remote | D Negligible |
| | | | | | | | Ensure PE (Civil) designs bracket fixing details adequately. | PE (Civil) | IV Negligible | IV Remote | D Negligible |
| | | | | | | | Ensure installation on site is according to approved plans. DBC staff to verify installation on site jointly with competent persons prior to leaving trainway. | Competent person | IV Negligible | IV Remote | D Negligible |
| 8 | Construction materials/ debris dropped onto viaduct tracks | (a) Disruption to train services or station operations<br>(b) Injury and/ or fatalities of public | No proper control on the handling of materials/ debris<br>No netting over openings in building facing viaduct<br>No regular inspection of netting | II Critical | II Probable | A Intolerable | Ensure PE (Civil) designs netting (over the openings) adequately and carries out regular inspection of netting erected. | PE (Civil) | IV Negligible | IV Remote | D Negligible |
| | | | | | | | Contractor to regularly inspect site for possible hazard and deterioration in netting erected. | Contractor | IV Negligible | IV Remote | D Negligible |
| 9 | Object or tennis ball thrown onto RTS viaduct | (a) Disruption to train services or station operations<br>(b) Injury and/ or fatalities of public | Object or tennis ball thrown through opening or window facing RTS viaduct | II Critical | II Probable | A Intolerable | Ensure building is orientated with end wall facing RTS viaduct here possible. | Registered Architect | IV Negligible | IV Remote | D Negligible |
| | | | | | | | Ensure protective screen is provided over the opening or window of adjacent building if it is unavoidable to have opening facing RTS viaduct. Fixing details of protective screen must be designed by PE (Civil). | Registered Architect<br>PE (Civil) | IV Negligible | IV Remote | D Negligible |

[1] Control measures in addition to the following:

(a) RTS (Development & Building Works in Railway Corridor & Railway Protection Zone) Regulations:
Regulation 9 requires the developer to appoint a qualified person to supervise the development and building works. No person will be allowed to carry out any development or building works except under the supervision of the appointed qualified person
Regulation 13 empowers LTA to penalise any person who carries out, or permits or authorises the carrying out of any development or building works without LTA's clearance. The penalties will be a maximum fine of $5,000 and in the case of a continuing offence, a fine of $100 for each day that the offence continues after conviction.
(b) RTS (Railway Protection, Restricted Activities) Regulations require any person intending to carry out restricted activities in Railway Protection Zone to obtain prior permission from LTA before commencement of work.

Risk Register
Notes:
This applies to all development & building works and restricted activities within the railway protection zone of the Rapid Transit System structures

| 1 | 2 | 3 | 4 | 5 | 6 | 7 | 8 | 9 | 10 | 11 | 12 |
|---|---|---|---|---|---|---|---|---|---|---|---|
| No. | Risk | Effects | Cause of Risk | Risk Severity | Risk Frequency | Risk Class | Control Measures[1] | Hazard Owner | Residual Risk Severity | Residual Risk Frequency | Residual Risk |
| 10 | Toppling or collapse of scaffolds onto RTS above ground structure | Scaffold topples onto RTS structure | Instability of temporary work or tie back | II Critical | II Probable | A Intolerable | Ensure PE (Civil) designs the tie back adequately and check that the scaffold is founded on stable ground. | PE (Civil) | IV Negligible | IV Remote | D Negligible |
| | | | | | | | Ensure PE (Civil) inspects and checks scaffold erected regularly. | PE (Civil) | IV Negligible | IV Remote | D Negligible |
| 11 | Surcharging work affecting RTS structure | (a) Excessive movement of RTS structure<br>(b) Water ingress at construction joints of segmental lining, etc.<br>(c) Affect track alignment<br>(d) Affect viaduct drainage system & lightning protection system | Over loading on RTS structure due to excessive stock piling | II Critical | II Probable | A Intolerable | Ensure PE (Civil) designs and calculates the additional impose load on RTS structure due to the proposed surcharge load. | PE (Civil) | IV Negligible | IV Remote | D Negligible |
| | | | Improper handling of site activities near existing viaduct drainage or lightning protection systems | III Marginal | II Probable | B Undesirable | Ensure measures are implemented to protect the existing viaduct drainage and lightning protection systems against possible damage by site activities. Contractor to be warned that viaduct drainage system, if affected, must be suitably diverted. Viaduct lightning protection system, if affected, must be suitably diverted, reinstated and tested. | PE (Civil) Contractor | IV Negligible | IV Remote | D Negligible |
| 12 | Dredging of sea bed or river bed affecting RTS sub-aqueous tunnel | (a) Excessive flotation or rotation of RTS sub-aqueous tunnel<br>(b) Affect track alignment. Derailment of train and injury or fatalities of public | Unauthorised dredging work. Unaware of the presence of RTS sub-aqueous tunnel | II Critical | II Probable | A Intolerable | Ensure railway operators patrol sub-aqueous tunnel area regularly and check that there is no unauthorised dredging activity on site. | Railway operator | IV Negligible | IV Remote | D Negligible |
| | | | Dredging beyond safe level specified by LTA leading to removal of over burden | II Critical | II Probable | A Intolerable | Ensure dredging within the 1st reserve of sea bed or river bed does not exceed the allowable level. | PE (Civil) Contractor | IV Negligible | IV Remote | D Negligible |

[1] Control measures in addition to the following:

(a) RTS (Development & Building Works in Railway Corridor & Railway Protection Zone) Regulations:
Regulation 9 requires the developer to appoint a qualified person to supervise the development and building works. No person will be allowed to carry out any development or building works except under the supervision of the appointed qualified person
Regulation 13 empowers LTA to penalise any person who carries out, or permits or authorises the carrying out of any development or building works without LTA's clearance. The penalties will be a maximum fine of $5,000 and in the case of a continuing offence, a fine of $100 for each day that the offence continues after conviction.

(b) RTS (Railway Protection, Restricted Activities) Regulations require any person intending to carry out restricted activities in Railway Protection Zone to obtain prior permission from LTA before commencement of work.

Risk Register
Notes:
This applies to all development & building works and restricted activities within the railway protection zone of the Rapid Transit System structures

| 1 | 2 | 3 | 4 | 5 | 6 | 7 | 8 | 9 | 10 | 11 | 12 |
|---|---|---|---|---|---|---|---|---|---|---|---|
| No. | Risk | Effects | Cause of Risk | Risk Severity | Risk Frequency | Risk Class | Control Measures[1] | Hazard Owner | Residual Risk Severity | Residual Risk Frequency | Residual Risk |
| 13 | Anchorage of vessel affecting RTS sub-aqueous tunnel | (a) Physical damage to RTS sub-aqueous tunnel<br>(b) Disruption to train services or station operations | Unauthorised anchoring of heavy vessel. Unaware of the presence of RTS sub-aqueous tunnel | II Critical | II Probable | A Intolerable | Ensure railway operator patrols sub-aqueous tunnel area regularly and checks that vessel with displacement (laden) weight of more than 20 ton is anchored outside the first reserve of sub-aqueous RTS tunnel. | Railway operator | IV Negligible | IV Remote | D Negligible |
| 14 | Tree toppling onto RTS at-grade or above ground structures | (a) Disruption to train services or station operations<br>(b) Injury and/ or fatalities of public | Specie of tree not properly selected.<br>Position of tree not properly planned.<br>Lack of proper maintenance of tree | III Marginal | II Probable | B Undesirable | Ensure tree with full grown height extending above the parapet wall of railway is planted such that its leaves or branches do not encroach within 3m from the edge of RTS viaduct. | Land owner | IV Negligible | IV Remote | D Negligible |
| | | | | | | | Ensure tree is pruned so that its branches do not encroach within 3m from the edge of RTS structure. | Land owner<br>Railway operator | IV Negligible | IV Remote | D Negligible |
| 15 | Construction equipment/ vehicles hitting RTS viaduct structures during crossing | (a) Physical damage to RTS viaduct beam/ column | Lack of warning sign to remind equipment/ vehicle operator of the vertical clearance below viaduct<br>Crane operator has forgotten to lower the boom while crossing under viaduct | II Critical | II Probable | A Intolerable | Ensure temporary height restriction gantries are provided on both sides of RTS viaduct to serve as reminder to vehicle driver. Gantries must be designed by PE (Civil). | PE (Civil) Contractor | IV Negligible | IV Remote | D Negligible |
| | | | | | | | Ensure reflective paint is provided on the gantries to enhance visibility. | Contractor | IV Negligible | IV Remote | D Negligible |
| | | | | | | | Ensure that temporary height restriction gantries are not closer than 1m from the outermost edge of the viaduct. The minimum clearance below the viaduct must be 750mm. | Contractor | IV Negligible | IV Remote | D Negligible |

[1] Control measures in addition to the following:

(a) RTS (Development & Building Works in Railway Corridor & Railway Protection Zone) Regulations:
Regulation 9 requires the developer to appoint a qualified person to supervise the development and building works. No person will be allowed to carry out any development or building works except under the supervision of the appointed qualified person
Regulation 13 empowers LTA to penalise any person who carries out, or permits or authorises the carrying out of any development or building works without LTA's clearance. The penalties will be a maximum fine of $5,000 and in the case of a continuing offence, a fine of $100 for each day that the offence continues after conviction.

(b) RTS (Railway Protection, Restricted Activities) Regulations require any person intending to carry out restricted activities in Railway Protection Zone to obtain prior permission from LTA before commencement of work.

Risk Register
Notes:
This applies to all development & building works and restricted activities within the railway protection zone of the Rapid Transit System structures

| 1 | 2 | 3 | 4 | 5 | 6 | 7 | 8 | 9 | 10 | 11 | 12 |
|---|---|---|---|---|---|---|---|---|---|---|---|
| No. | Risk | Effects | Cause of Risk | Risk Severity | Risk Frequency | Risk Class | Control Measures[1] | Hazard Owner | Residual Risk Severity | Residual Risk Frequency | Residual Risk |
| 16 | Tunnel construction affecting operating tunnel | (a) Excessive movements at operating tunnel<br>(b) Water ingress at construction joints of operating tunnel with segmental lining, etc.<br>(c) Affect track alignment. Derailment of train and injury or fatalities of public | Insufficient clearance between proposed and existing tunnel | II Critical | II Probable | A Intolerable | Ensure proposed tunnel is at least one diameter away from operating tunnel (in good ground condition only). Engineering risk assessment to check the effect on the existing tunnel structurally and also the alignment of the track due to the work must be carried out. | PE (Civil) | III Marginal | IV Remote | C Tolerable |
| | | | Excessive volume loss during tunnelling<br>Collapse or uncontrolled ground movement<br>No proper control of tunnelling method and safety procedure | II Critical | II Probable | A Intolerable | Ensure excavated tunnel is continuously and fully supported with a permanent lining designed to support the full overburden load including water load. Tail void must be grouted continuously. | PE (Civil) Contractor | III Marginal | IV Remote | C Tolerable |
| | | | | | | | Ensure face pressure is maintained at all times to prevent collapse or blow out. | PE (Civil) Contractor | III Marginal | IV Remote | C Tolerable |
| | | | | | | | Ensure ground improvement measures such as grouting, pipe arch roof technique are considered where applicable to prevent ground collapse or ravelling of soil. | PE (Civil) Contractor | III Marginal | IV Remote | C Tolerable |
| | | | | | | | Ensure measure to prevent ingress of water with fines or soils is implemented. | PE (Civil) Contractor | III Marginal | IV Remote | C Tolerable |
| | | | | | | | Ensure tunnelling technique does not involve any blasting. | PE (Civil) Contractor | IV Negligible | IV Remote | D Negligible |

[1] Control measures in addition to the following:

(a) RTS (Development & Building Works in Railway Corridor & Railway Protection Zone) Regulations:
Regulation 9 requires the developer to appoint a qualified person to supervise the development and building works. No person will be allowed to carry out any development or building works except under the supervision of the appointed qualified person
Regulation 13 empowers LTA to penalise any person who carries out, or permits or authorises the carrying out of any development or building works without LTA's clearance. The penalties will be a maximum fine of $5,000 and in the case of a continuing offence, a fine of $100 for each day that the offence continues after conviction.

(b) RTS (Railway Protection, Restricted Activities) Regulations require any person intending to carry out restricted activities in Railway Protection Zone to obtain prior permission from LTA before commencement of work.

Risk Register
Notes:
This applies to all development & building works and restricted activities within the railway protection zone of the Rapid Transit System structures

| 1 | 2 | 3 | 4 | 5 | 6 | 7 | 8 | 9 | 10 | 11 | 12 |
|---|---|---|---|---|---|---|---|---|---|---|---|
| No. | Risk | Effects | Cause of Risk | Risk Severity | Risk Frequency | Risk Class | Control Measures[1] | Hazard Owner | Residual Risk Severity | Residual Risk Frequency | Residual Risk |
| 17 | Groundwater lowering affecting RTS structure in compressible soil | (a) Consolidation settlement resulting in settlement of RTS structure not supported on piles<br>(b) Affect track alignment. Derailment of train and injury or fatalities of public<br>(c) Additional load on RTS structure due to changes in ground condition due to ground water lowering | TERS for basement excavation not effective for cutting off water seepage | II Critical | II Probable | A Intolerable | Ensure TERS is sufficiently watertight to prevent ground water drawdown. | PE (Civil) Contractor | IV Negligible | IV Remote | D Negligible |
| | | | | | | | Ensure gaps in TERS are sealed up. For example, grout piles are used to seal up the gaps in the contiguous bored pile wall. | PE (Civil) Contractor | IV Negligible | IV Remote | D Negligible |
| | | | | | | | Ensure toe of earth retaining wall is extended deep enough to cut-off any water seepage. Check on minimum penetration length of retaining wall installed must be carried out on site. | PE (Civil) Contractor | IV Negligible | IV Remote | D Negligible |
| | | | | | | | Ensure bottom of excavation is provided with blinding concrete immediately after reaching the formation to minimise lowering of ground water. | Contractor | IV Negligible | IV Remote | D Negligible |
| | | | Absence of precautionary measures against lowering of ground water | II Critical | II Probable | A Intolerable | Ensure recharging wells are installed to replenish any loss of ground water. These wells are to be designed, installed and tested before excavation starts. They should be sufficiently large with area well covered to ensure their effectiveness in maintaining ground water table. | PE (Civil) Contractor | IV Negligible | IV Remote | D Negligible |

[1] Control measures in addition to the following:

(a) RTS (Development & Building Works in Railway Corridor & Railway Protection Zone) Regulations:
Regulation 9 requires the developer to appoint a qualified person to supervise the development and building works. No person will be allowed to carry out any development or building works except under the supervision of the appointed qualified person
Regulation 13 empowers LTA to penalise any person who carries out, or permits or authorises the carrying out of any development or building works without LTA's clearance. The penalties will be a maximum fine of $5,000 and in the case of a continuing offence, a fine of $100 for each day that the offence continues after conviction.

(b) RTS (Railway Protection, Restricted Activities) Regulations require any person intending to carry out restricted activities in Railway Protection Zone to obtain prior permission from LTA before commencement of work.

Risk Register
Notes:
This applies to all development & building works and restricted activities within the railway protection zone of the Rapid Transit System structures

| 1 | 2 | 3 | 4 | 5 | 6 | 7 | 8 | 9 | 10 | 11 | 12 |
|---|---|---|---|---|---|---|---|---|---|---|---|
| No. | Risk | Effects | Cause of Risk | Risk Severity | Risk Frequency | Risk Class | Control Measures[1] | Hazard Owner | Residual Risk Severity | Residual Risk Frequency | Residual Risk |
| 18 | Excavation work affecting RTS structure | (a) Excessive movement and deformation of RTS structure. For example, excessive distortion of tunnel could affect the tunnel structural gauge which may damage train or fittings in the tunnel<br>(b) Affect track alignment. Derailment of train and injury or fatalities of public | Excavation for basement or pile cap construction results in stress relief leading to settlement/ heave and lateral movement of the ground | II Critical | II Probable | A Intolerable | Ensure TERS is sufficiently rigid and adequately strutted and braced to minimise lateral ground movement. Walers/ struts must be installed at the right levels and provide support to the TERS. | PE (Civil) Contractor | IV Negligible | IV Remote | D Negligible |
| | | | | | | | Ensure lateral supports to TERS are installed immediately after each stage of excavation. | PE (Civil) Contractor | IV Negligible | IV Remote | D Negligible |
| | | | | | | | Ensure excavation is carried out in a compartmentalised manner, where possible, to minimise ground movement. | PE (Civil) Contractor | IV Negligible | IV Remote | D Negligible |
| | | | Excavation for pile construction results in stress relief or collapse of bored hole | II Critical | II Probable | A Intolerable | Ensure bored holes or trenches are fully supported at all time to prevent soil collapse. | PE (Civil) Contractor | IV Negligible | IV Remote | D Negligible |
| 19 | Emergency situations affecting RTS structure | (a) Excessive movement and deformation of RTS structure<br>(b) Disruption to train services or station operations<br>(c) Injury and/ or fatalities of public | Accidents related to construction activities such as material falls onto viaduct, crane topples onto viaduct, water ingress into station premises, etc. | II Critical | II Probable | A Intolerable | Ensure PE (Civil) identifies all possible hazardous activities. Prepares an emergency plan stating clearly the immediate actions to be taken to safeguard the RTS in the event of any emergency. Follow up actions after implementation of control measures are to be stated. | PE (Civil) Contractor | IV Negligible | IV Remote | D Negligible |
| | | | | | | | Ensure PE (Civil) prepares a call-up list stating the names and contact numbers of all key personnel including the qualified persons, project manager, site supervisors, instrumentation specialist (if applicable), etc. A flow chart for the emergency reporting is to be included. | | | | |

[1] Control measures in addition to the following:

(a) RTS (Development & Building Works in Railway Corridor & Railway Protection Zone) Regulations:
Regulation 9 requires the developer to appoint a qualified person to supervise the development and building works. No person will be allowed to carry out any development or building works except under the supervision of the appointed qualified person
Regulation 13 empowers LTA to penalise any person who carries out, or permits or authorises the carrying out of any development or building works without LTA's clearance. The penalties will be a maximum fine of $5,000 and in the case of a continuing offence, a fine of $100 for each day that the offence continues after conviction.

(b) RTS (Railway Protection, Restricted Activities) Regulations require any person intending to carry out restricted activities in Railway Protection Zone to obtain prior permission from LTA before commencement of work.

Risk Register
Notes:
This applies to all development & building works and restricted activities within the railway protection zone of the Rapid Transit System structures

| 1 | 2 | 3 | 4 | 5 | 6 | 7 | 8 | 9 | 10 | 11 | 12 |
|---|---|---|---|---|---|---|---|---|---|---|---|
| No. | Risk | Effects | Cause of Risk | Risk Severity | Risk Frequency | Risk Class | Control Measures[1] | Hazard Owner | Residual Risk Severity | Residual Risk Frequency | Residual Risk |
| | | | Monitoring readings exceeding the trigger levels | II Critical | II Probable | A Intolerable | Ensure PE specifies the various alert and work suspension levels for each and every instruments and the action plan for immediate implementation upon exceeding the trigger levels. | PE (Civil) Contractor | IV Negligible | IV Remote | D Negligible |

[1] Control measures in addition to the following:

(a) RTS (Development & Building Works in Railway Corridor & Railway Protection Zone) Regulations:
Regulation 9 requires the developer to appoint a qualified person to supervise the development and building works. No person will be allowed to carry out any development or building works except under the supervision of the appointed qualified person
Regulation 13 empowers LTA to penalise any person who carries out, or permits or authorises the carrying out of any development or building works without LTA's clearance. The penalties will be a maximum fine of $5,000 and in the case of a continuing offence, a fine of $100 for each day that the offence continues after conviction.

(b) RTS (Railway Protection, Restricted Activities) Regulations require any person intending to carry out restricted activities in Railway Protection Zone to obtain prior permission from LTA before commencement of work.

## Definitions of Terms in the Hazard Register

| Column | Field Name | Descriptions |
|---|---|---|
| 1. | No. | Running number assigned to each hazard |
| 2. | Risk | A situation or circumstance in which there is a potential for an accident to occur that may cause injury or fatality to personnel, or damage to system or environment. For example, toxic fumes are a potential hazard. In many cases, the hazard may be continuously present under normal conditions, referred to as an intrinsic hazard. Note that the hazard is distinct from the accident, but is rather the circumstances in which the accident may occur. |
| 3. | Effects | A description of the resultant actual effect to persons or rapid transit systems. For example there would be fatalities as a result of the presence of a train fire (hazard cause), that produces toxic smoke (the hazard), without adequate evacuation. |
| 4. | Cause of Risk | The events, circumstances or conditions that result in the creation of the hazard. There may be a causal chain of circumstances that follow from one another, resulting in the condition in which an accident may occur. The hazard cause is one step in this chain of events, and as such, the analyst should document the most significant milestone events in order to be as descriptive as possible as the hazard develops into an accident. |
| 5. | Risk Severity | Severity classification. |
| 6. | Risk Frequency | Risk Frequency classification. |
| 7. | Risk Class | Risk Classification. |
| 8. | Control Measures | Provision of safeguards/control measures for considerations. |
| 9. | Hazard Owner | Identify the responsible parties who own the hazard. e.g. Contractor, Project team, etc. |
| 10. | Residual Risk Severity | Change in Severity classification after appropriate mitigation measures are in placed to eliminate or control the hazard. |
| 11. | Residual Risk Frequency | Change in Risk Frequency classification after appropriate mitigation measures are in placed to eliminate or control the hazard. |
| 12. | Residual Risk | Change in Risk Class after appropriate mitigation measures are in placed to eliminate or control the unacceptable risk to a tolerable level. |

**Risk Matrix Table**

| No | Consequence | Rating | Description* |
|---|---|---|---|
| 1 | Catastrophic | I | • Single or Multiple loss of life from injury or occupational disease, immediately or delayed; and/or<br>• Loss of whole production for greater than 3 man-days and/or<br>• Total loss in excess of $1 million. |
| 2 | Critical | II | • Reportable major injury[1], occupational disease1 or dangerous occurrence; and/or<br>• Damaged to works or plants causing delays of up to 3 man-days; and/or<br>• Total loss in excess of $250,000 but up to $1 million. |
| 3 | Marginal | III | • Reportable injury[2], occupational disease2 ; and/or<br>• Damage to works or plants causing delays of up to 1 man-day; and/or,<br>• Total loss in excess of $25,000 but up to $250,000. |
| 4 | Negligible | IV | • Minor injury[3], no lost time or person involved returns to work during the shift after treatment; and/or<br>• Damage to works or plants does not cause significant delays; and/or<br>• Total loss of up to $25,000. |

Note:
(*) If more than one of the descriptions occurs, the severity rating would be increased to the next higher level. Applicable to item numbers 2 and 3 only.
[1] For man-days lost greater than 7 days.
[2] For man-days lost between 4 to 7 days.
[3] For man-days lost between 1 to 3 days.

| Likelihood | Rating | Description |
|---|---|---|
| Frequent | I | Likely to occur 12 times or more per year |
| Probable | II | Likely to occur 4 times per year |
| Occasional | III | Likely to occur once a year |
| Remote | IV | Likely to occur once in 5 year project period |
| Improbable | V | Unlikely, but may exceptionally occur |

| Risk Category | | | Risk Severity Category | | | |
|---|---|---|---|---|---|---|
| | | | I | II | III | IV |
| | | | Catastrophic | Critical | Marginal | Negligible |
| Risk Frequency Category | I | Frequent | A | A | A | B |
| | II | Probable | A | A | B | C |
| | III | Occasional | A | B | C | C |
| | IV | Remote | B | C | C | D |
| | V | Improbable | C | C | D | D |

| Hazard Resolution Matrix | |
|---|---|
| Intolerable | Risk shall be reduced by whatever means possible. |
| Undesirable | Risk shall only be acceptable if further risk reduction is not practicable. |
| Tolerable | Risk shall be accepted subject to demonstration that the level of risk is as low as reasonably practicable. |

| | |
|---|---|
| Negligible | Risk is acceptable. |